Electronic Supplementary Material (ESI) for Journal of Materials Chemistry

Supporting Information

Low Temperature Plasma-Mediated Synthesis of Graphene Nanosheets for Supercapacitor Electrodes

Quan Zhou[a], Zongbin Zhao[a*], Yongsheng Chen[b], Han Hu[a], and Jieshan Qiu[a*]

[a] *Carbon Research Laboratory, PSU-DUT Joint Center for Energy Research, School of Chemical Engineering, State Key Lab of Fine Chemicals, Dalian University of Technology, Dalian, China.;* [b] *EMS Energy Institute, PSU-DUT Joint Center for Energy Research, and John and Willie Leone Family Department of Energy and Mineral Engineering, the Pennsylvania State University, University Park, PA 16802, USA*

**Corresponding author. E-mail: zbzhao@dlut.edu.cn, jqiu@dlut.edu.cn*

I. Preparation of graphite oxide (GO)

The GO was prepared by modified Hummers method. Typically, 5 g nature flake graphite (NFG) was dispersed in 130 mL concentrated H_2SO_4 with 0 °C ice bath and stirred for 4 h to make NFG was intercalated adequately. After 2.5 g $NaNO_3$ was mixed with intercalation compound, 15 g $KMnO_4$ was added slowly to the above solution with stirring and cooling. Then, the suspended solution was stirred continuously for 12 h, and 46 mL of distilled water was added slowly to the suspension, causing violent effervescence and controlling the increasing temperature under 98 °C. Subsequently, the suspension was added by 140 mL of warm water to further diluted, and continually stirred for 4 h. 10 mL 30% H_2O_2 was used to reduce the residual permanganate and manganese dioxide to colorless soluble manganese sulfate. Finally, the resulting suspension was filtered, washed with deionized water, and dried in a vacuum oven at 60 °C for 24 h to obtain GO.

II. Configuration of the dielectric barrier discharge (DBD) discharge reactor

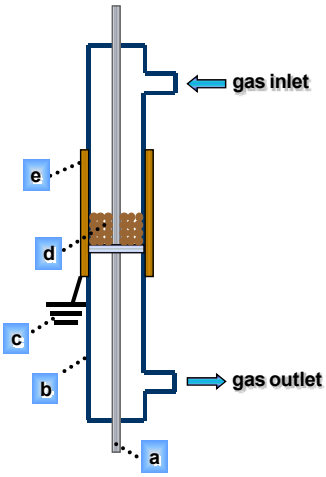

Fig. S1. The configuration of the DBD reactor: (a) high-voltage electrode, (b) quartz tube, (c) ground, (d) GO, (e) low-voltage electrode.

Synthesis of graphene was carried out in a DBD reactor (Fig. S1) consisting of a quartz tube and two electrodes. A stainless-steel rod with a diameter of 2 mm was used as high-voltage electrode and installed in the axis of the quartz tube, which connected to an alternating current supply. The grounding electrode was a copper-screen substrate, which was wrapped around the quartz tube and linked to ground by a wire.

III. FE-SEM images of GO

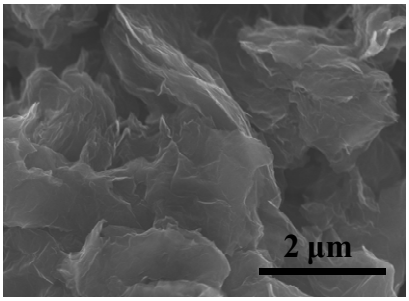

Fig. S2. FE-SEM images of GO.

IV. FTIR spectra of GO and graphene

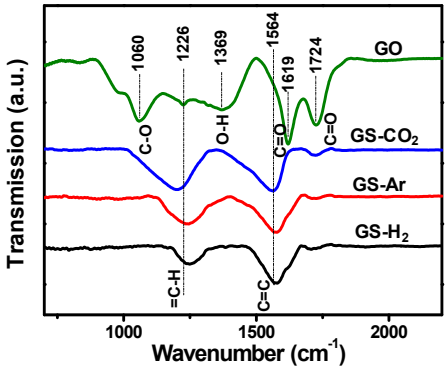

Fig. S3. FTIR spectra of GO and graphene prepared by DBD plasma with different type of working gases.

V. Adsorption/desorption analysis of graphene from different atmosphere plasma

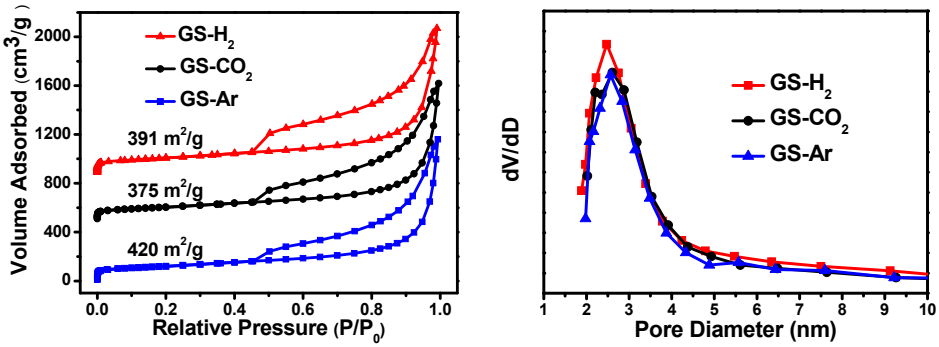

Fig. S4 (a) Nitrogen adsorption and desorption isotherms of GS from H_2, CO_2 and Ar discharge plasma at 77 K; (b) pore-size distribution.

VI. Electrochemical performance of GO and graphene

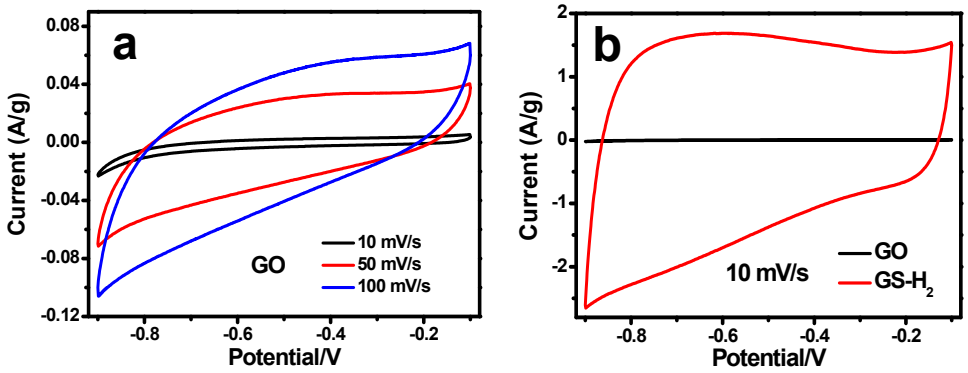

Fig. S5 (a) Cyclic voltammetry curves of GO at the scan rates of 10 mV/s, 50 mV/s and 100 mV/s; (b) cyclic voltammetry curves of GO and GS with the scanning rates of 10 mV/s.