Electronic Supplementary Information

Microfluidic stretchable RF electronics

Shi Cheng and Zhigang Wu*

Department of Engineering Sciences, Uppsala University, Box 534, The Angstrom Laboratory, SE 751 21, Uppsala, Sweden

* To whom correspondence should be addressed (Zhigang.Wu@angstrom.uu.se)

List of electronic supplementary information

1 Antenna Schematic

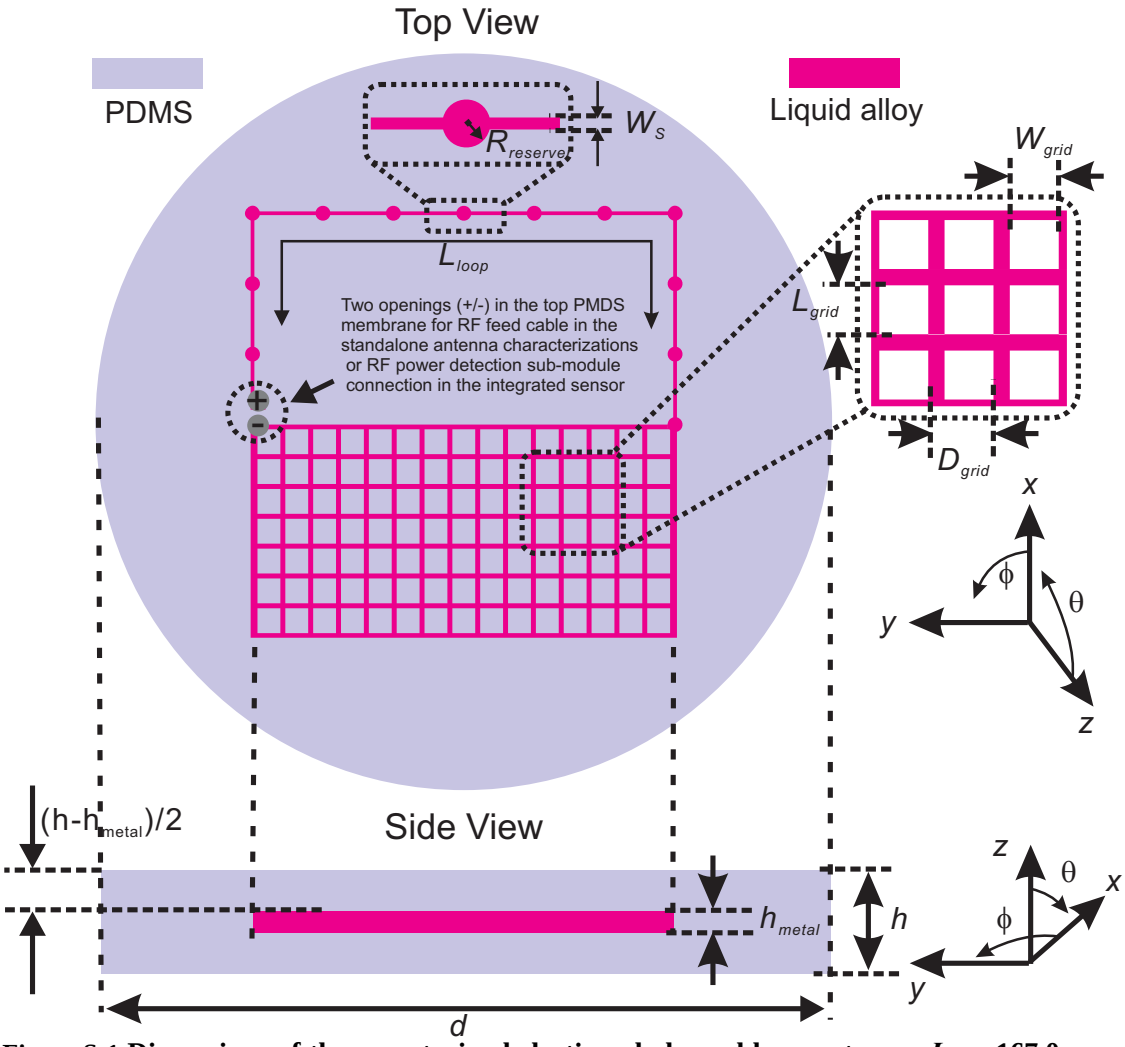

Figure S-1 Dimensions of the non-strained elastic unbalanced loop antenna: L_{loop}=167.0 mm, R_{sub}=75.0 mm, $R_{reservior}$=3.0 mm, W_S=750 µm, L_{grid}=5.0 mm, W_{grid}=4.6 mm, D_{grid}=5.6 mm, h=1.1 mm, h_{metal}=75 µm.

Fig. S-1 depicts the design of the presented stretchable unbalanced loop antenna consisting of a half-square loop radiator and a semi-circular ground plane. The resonance frequency f of the antenna is determined by the overall length of the upper loop (L_{loop})

$$f \approx \frac{c}{2L_{loop}\sqrt{\varepsilon_{eff}}} \qquad (1)$$

where c is the light velocity in free-space, ε_{eff} is the effective dielectric constant that is approximately equal to 1 due to the negligible effect of the thin PDMS membrane.

2 Circuit Schematic

The details of the active circuits for RF power detection are illustrated in Fig. S-2.

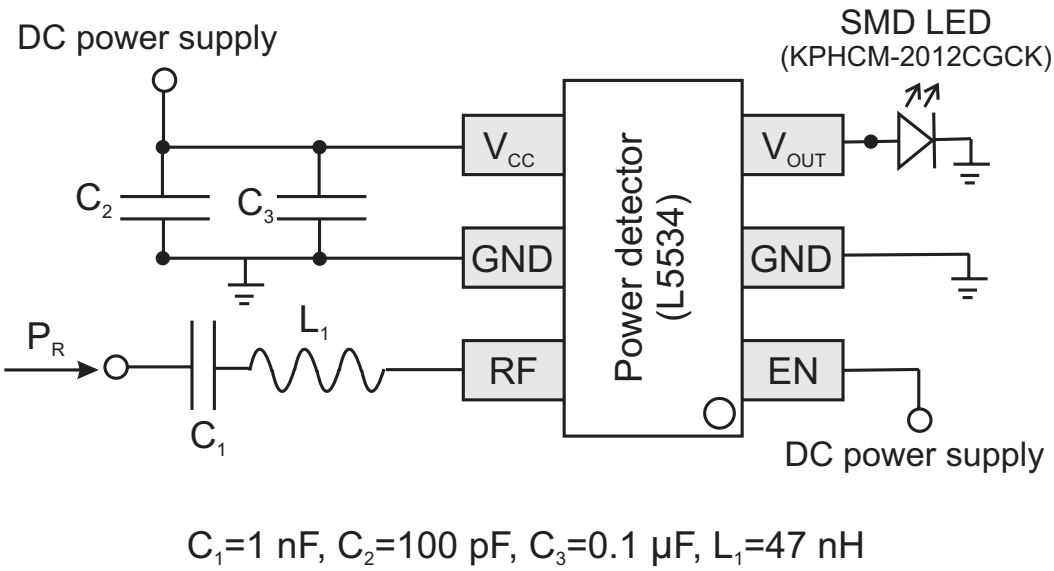

Figure S-2 Schematic of the RF power detection circuits assembled on flex foil.

The RF power detection sub-module was externally powered by four serially connected AA rechargeable batteries with an output voltage of 5.23 V. The RF power detector was set to the continuous operation mode by connecting its enable port (EN) to the same DC power supply in the experiments.

3 Reflection coefficient of the non-stretched antenna

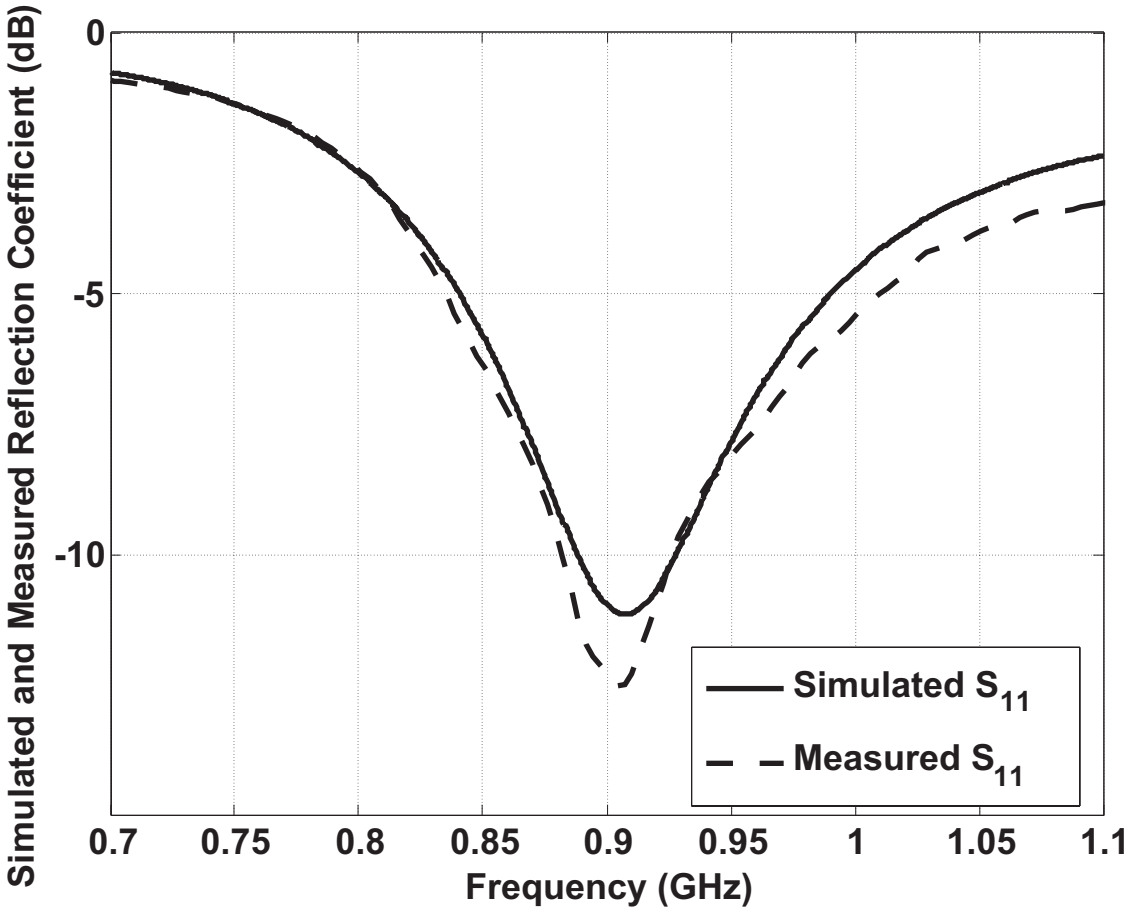

Figure S-3 Simulated and measured reflection coefficient of the non-stretched antenna.

4 Radiation patterns of the non-stretched and stretched antennas

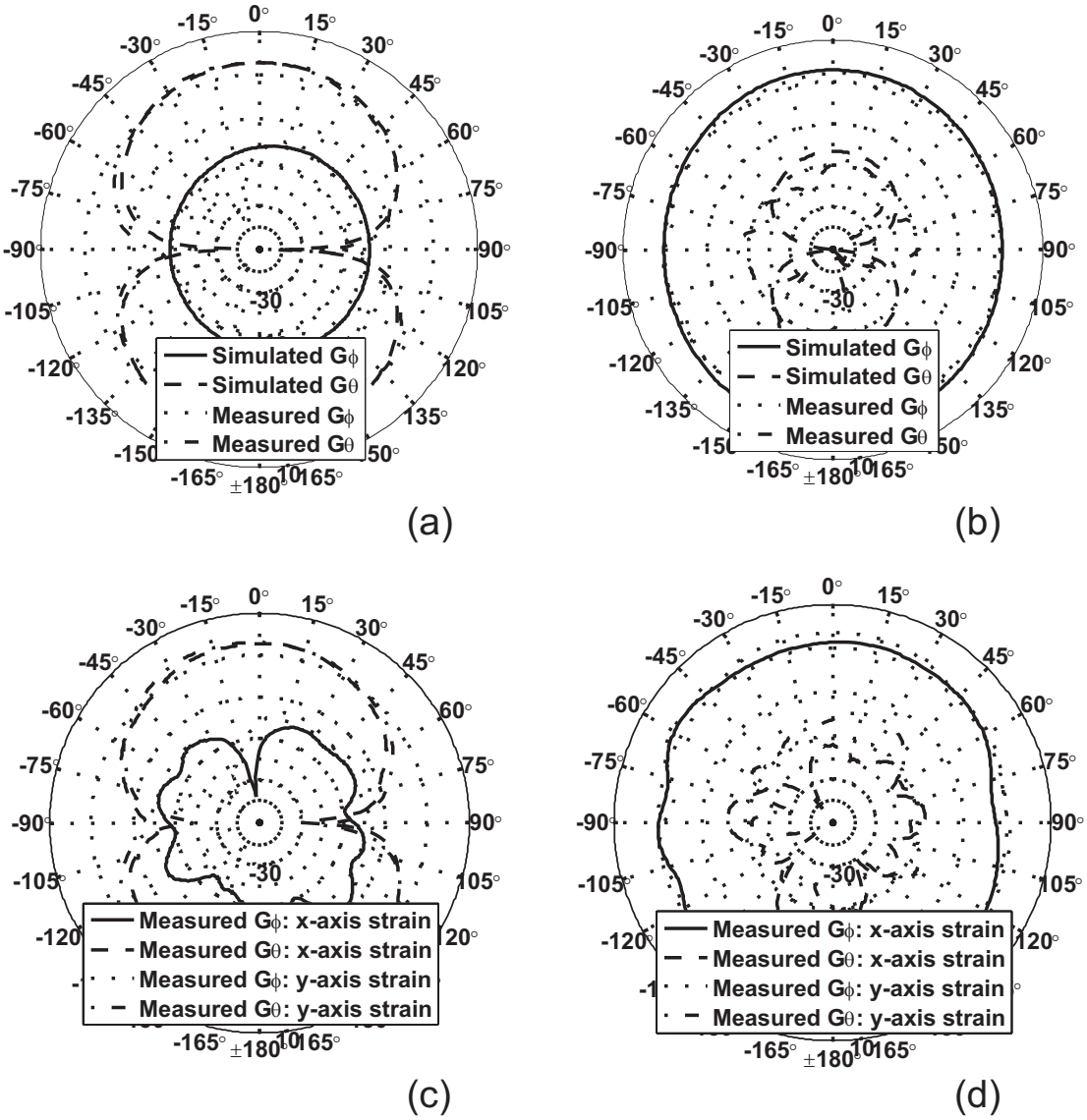

Figure S-4 Simulated and measured (a) *xz*- and (b) *yz*-plane radiation patterns, at 900 MHz, of the non-stretched antenna, and measured (c) *xz*- and (d) *yz*-plane radiation patterns, at 900 MHz, of the antenna with 15% elongation along either *x*- or *y*- axis. The corresponding coordinate system is depicted in Fig. S-1. The antenna gain along φ and θ orientations is defined as G_φ and G_θ, respectively.