Electronic Supplementary Material (ESI) for Lab on a Chip.
This journal is © The Royal Society of Chemistry 2016

Supporting Information

Spinning micro-pipette liquid emulsion generator for single cell whole genome amplification

Zitian Chen,[a,b] Yusi Fu,[a,b] Fangli Zhang,[a,b] Lu Liu,[a,b] Naiqing Zhang,[a] Dong Zhou,[a] Junrui Yang,[c] Yuhong Pang,[a,b] and Yanyi Huang*[,a,b,d]

[a] Biodynamic Optical Imaging Center (BIOPIC), School of Life Sciences, and College of Engineering, Peking University, Beijing, China

[b] Beijing Advanced Innovation Center for Genomics (ICG), Peking University, Beijing, China

[c] School of Electronics Engineering and Computer Science, Peking University, Beijing, China

[d] Peking-Tsinghua Center for Life Sciences, Peking University, Beijing, China

* Corresponding author. E-mail: yanyi@pku.edu.cn

Part I. Materials and methods

1. Experimental setup of SiMPLE generator and protocol of w/o emulsions generation.

A glass micropipette is attached to a load platform (Figure S1). The platform, made of polyoxymethylene (POM), is connected to a speed-controlled servo motor (YZ-ACSD608) through an eccentric wheel, made of copper. The eccentric distance, i.e. the rotation radius of the glass micropipette tube, is 1.5 mm. Glass micropipettes are fabricated by a micropipette puller (Sutter P-1000). The inner diameter of micropipette tip is around 10 μm. The surface of the glass micropipettes is cleaned by a plasma cleaner, and then modified by 1H,1H,2H,2H-perfluorooctyl trichlorosilane (TCPFO) vapor in a vacuum desiccator for 40 min to become hydrophobic.

The tip of micropipette was immersed into oil, and the other end of the tube is connected to a 1 ml syringe held on a syringe pump (Longer Pump TJ-2A, China) via FEP microbore tubing to generate constant flow rate. The buffer used in dispensed phase was filtered by a 0.22μm filter to prevent clogging at the micropipette tip.

For generating w/o emulsions, we use mineral oil (SIGMA M3516) supplemented with 4.5% Span80 (SIGMA S6760) , 0.4% Tween80 (SIGMA P8074) and 0.05% Triton X-100 (Beyotime ST795) in volume as continuous oil phase and MiliQ water supplemented with 1x Phi29 buffer(NEB) as dispersed phase. Density of dispersed phase and continuous phase are 1.002 kg/l and 0.784 kg/l, respectively. Interfacial tension between dispersed and continuous phase is 6.27 dyn/cm, obtained using the pendant drop measurement. Viscocity of continuous phase is 48.65 cP. All the physical properties above are measured under temperature of 25 ℃.

2. Scale analysis of forces on a drop with the specific experimental parameters.

We assume the drop as a sphere and simplify the forces acting upon it in our analysis. The force balance of the drop can be described by the following equation.

$$(F_b + F_l)^2 + {F_n}^2 + {F_d}^2 = {F_\gamma}^2 \qquad (1)$$

where F_b is the difference between buoyancy force and drop gravity, F_l is lift force, F_n is

centrifugal force, F_d is drag force, and F_γ is interfacial tension.

The interfacial tension, which holds the drop on the tube, is $\mathrm{F_\gamma = \pi d_n \gamma}$, where γ is the interfacial tension between the continuous phase and disperse phase, d_n is the diameter of the neck during droplet generation. We find that d_n is in the same level with d_i ($d_n \approx d_i$), where d_i is the inner diameter of the micropipette tip. The drag force is a modification of the Stokes formula $\mathrm{F_d = 3\pi\eta_c d(v - v_d - v_c)}$ in the situation with low Reynolds number ($\mathrm{Re} = \frac{\rho_c v d}{\eta_c} \leq 1$), where d is the diameter of the drop, and η_c and ρ_c are the dynamic viscosity and density of the continuous phase respectively, and v is the relative velocity between the micropipette tip and the centrifuge tube, and v_c is the relative velocity between the continuous phase and the centrifuge tube near the tip, and $v_d \approx \frac{\mathrm{q}}{\pi d^2}$ is the velocity of the expanding drop relative to the tip. The buoyancy force, considering the gravity of the drop, is $F_b = \frac{1}{6}\pi d^3 g \Delta\rho$, where $\Delta\rho = \rho_c - \rho_d$ is the density difference of the continuous and dispersed phase, and g is gravitational acceleration. The centrifugal force is $F_n = \frac{1}{6}\pi d^3 \Delta\rho \omega^2 l$, where ω is the angular velocity of the tip, and l is the rotation radius of the tip. A lift force F_l will act on the drop because of the low pressure behind the micropipette tip.

With our specific experimental parameters, γ = 6.27 dyn/cm, η_c = 48.65 cP, $\Delta\rho = 218\ \mathrm{kg}/m^3$, $\mathrm{l} = 1.5\ \mathrm{mm}$, d_i = 15 μm, we analyze the scale of forces on a drop during its formation, assuming $\omega = 400\ \mathrm{rpm}$ (assume $\omega \leq 600\ \mathrm{rpm}$), $\mathrm{q} =$ 0.5 μL/min, d = 50 μm.

$$\mathrm{F_\gamma = \pi d_i \gamma \sim 3\times10^{-7} N}$$

$$\mathrm{F_d = 3\pi\eta_c d(v - v_d - v_c) \sim 3\pi\eta_c dv \sim 1\times10^{-6} N}$$

where $\mathrm{v_c}$ and $\mathrm{v_d} \approx \frac{\mathrm{q}}{\pi \mathrm{d}^2} \sim 1\ \mathrm{mm/s}$ are much smaller than $\mathrm{v = \omega\times r \sim 63\ mm/s}$ and are neglected.

$$\mathrm{F_b = \frac{1}{6}\pi d^3 g \Delta\rho \sim 1\times10^{-10} N}$$

$$\mathrm{F_n = \frac{1}{6}\pi d^3 \Delta\rho \omega^2 l \sim 1\times10^{-12} N}$$

So the buoyancy force F_b, the lift force F_l and the centrifugal force F_n are all small in comparison to the viscous drag force F_d and interfacial tension $\mathrm{F_\gamma}$ and are neglected in Equation (1).

When F_b, F_l and F_n are all neglectable comparing to the viscous drag force F_d, thus

Equation (1) can be simplified as balance between the interfacial tension and the stokes drag, which leads to

$$\frac{d}{d_i} \sim \frac{\gamma}{3\eta_c v} = (\frac{v}{v_0})^{-1} \qquad (2)$$

where d is drop diameter, d_i is inner diameter of the micropipette tip, γ is interfacial tension between the continuous phase and dispersed phase, η_c is dynamic viscosity of the continuous phase, v is the relative velocity between the micropipette tip and the centrifuge tube, and we set variable $v_0 = \gamma/3\eta_c$.

3. Droplet size control, dispersity, and curve fitting.

We took bright field microscopic images using an inverted microscope (Nikon Ti-E) with a CCD camera (Qimaging 2000R). We analyzed the pictures and calculate the size of each droplets using MATLAB. The results are shown in Figure S2.

We used an empirical formula for predicting droplet diameters:

$$\frac{\mathrm{d}}{\mathrm{d_i}} = \mathrm{A_1}(\frac{\mathrm{q}}{\mathrm{q_0}})^{\frac{1}{3}}(\frac{\mathrm{v}}{\mathrm{v_0}})^{-1} + \mathrm{A_2}(\frac{\mathrm{q}}{\mathrm{q_0}})^{\frac{1}{3}} + \mathrm{A_3}(\frac{\mathrm{v}}{\mathrm{v_0}})^{-1} + \mathrm{A_4}$$

with $\mathrm{A_1} = 1.76, \mathrm{A_2} = 3.14, \mathrm{A_3} = 0.24, \mathrm{A_4} = 0.79.$

4. Experimental procedure and protocol of eWGA

We lysed single mouse ES cells in tube with volume of 2 μl, releasing genomic DNA (gDNA) fragments. Then we dehybridize the double-strand gDNA into single strands by heat (95 ℃ for 5 min). Prior mixed MDA reaction buffer (8 μl, containing 0.8 μl of Phi-29 polymerase (NEB), 1 μl of 50 μM random hexamer primers (Invitrogen), and 1 μl of 1 mM dNTP (NEB)) was added to each tube at 4 ℃. 10 μl reaction solution was immediately tranferred into the glass micropipette and dispersed into droplets in oil, at 4 ℃, within 10 min by SiMPLE generator. We controlled the diameter of droplet (about 50 μm) by tuning the spinning speed of the micropipette and the delivering rate of reaction buffer. As a result, 10 μl reaction solution was separated into $\sim 1.5\times10^5$ droplets. Isothermal amplification reaction started when we placed the microcentrifuge tubes in thermomixer at 30 ℃. The whole amplification time is about 8 h. The eWGA reaction was terminated by heat inactivation of the polymerase at 60 ℃ for 10 min and demulsification by votexing with 700 μl isopropanol.

The amplification was reproducible and validated by quantitative PCR (Figure S3). We chose 10 single-cell eWGA products to construct libraries for next-generation sequencing. Meanwhile, two mouse ES single cell were selected to perform the MDA reaction in tube, and then sequenced as well, for comparison. We sequenced about 0.3G bases for each library using Illumina Hiseq platform. The coverage distribution across the whole genome of each sample was listed in Figure S4.

5. A simpler SiMPLE generator combining pipette with electrical toothbrush (For Fun!)

In a very beginning of this project, we have decided to perform a 'quick and dirty' experiment to test the idea of generation of emulsion via spinning a glass micropipette in oil. We purchased a specific electro toothbrush (Panasonic) and replaced its brush head with a glass micropipette. We just simply taped the micropipette to the toothbrush, and used a 20 μl conventional manual pipette (Eppendorf) to slowly push the aqueous liquid out of the glass pipette. Although with no precise control at all, we found this simple combination could produce a large amount of w/o droplets within very short period of time. We noticed that the distribution of the droplets was not monodisperse, but majority of droplets are about 50 - 100 μm in diameter, which is actually the best size for eWGA. We also immediately realized that the motion speed of the glass micropipette is critical since the droplet size would also be affect by the motion speed. Interestingly this finding was verified by testing other electrical toothbrushes. Panasonic electrical toothbrush uses circular motion to drive the brushhead, hence the linear motion speed of micropipette is constant. While another popular brand, Philips, uses reciprocating motion which does not provide constant linear motion speed of the brushhead, and cannot be used in our application.

Part II. Supporting Figures

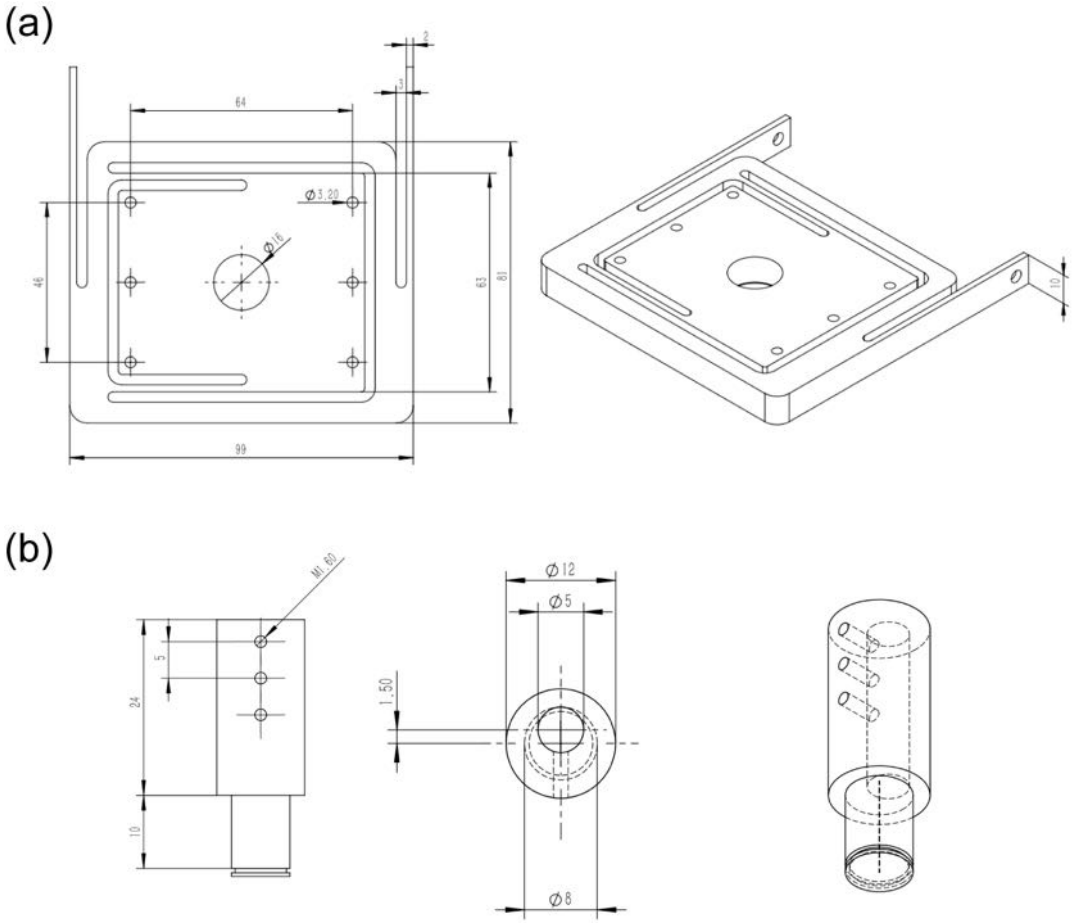

Figure S1. The design details of the loading platform (a) and the 1.5 mm off-axis eccentric shank (b).

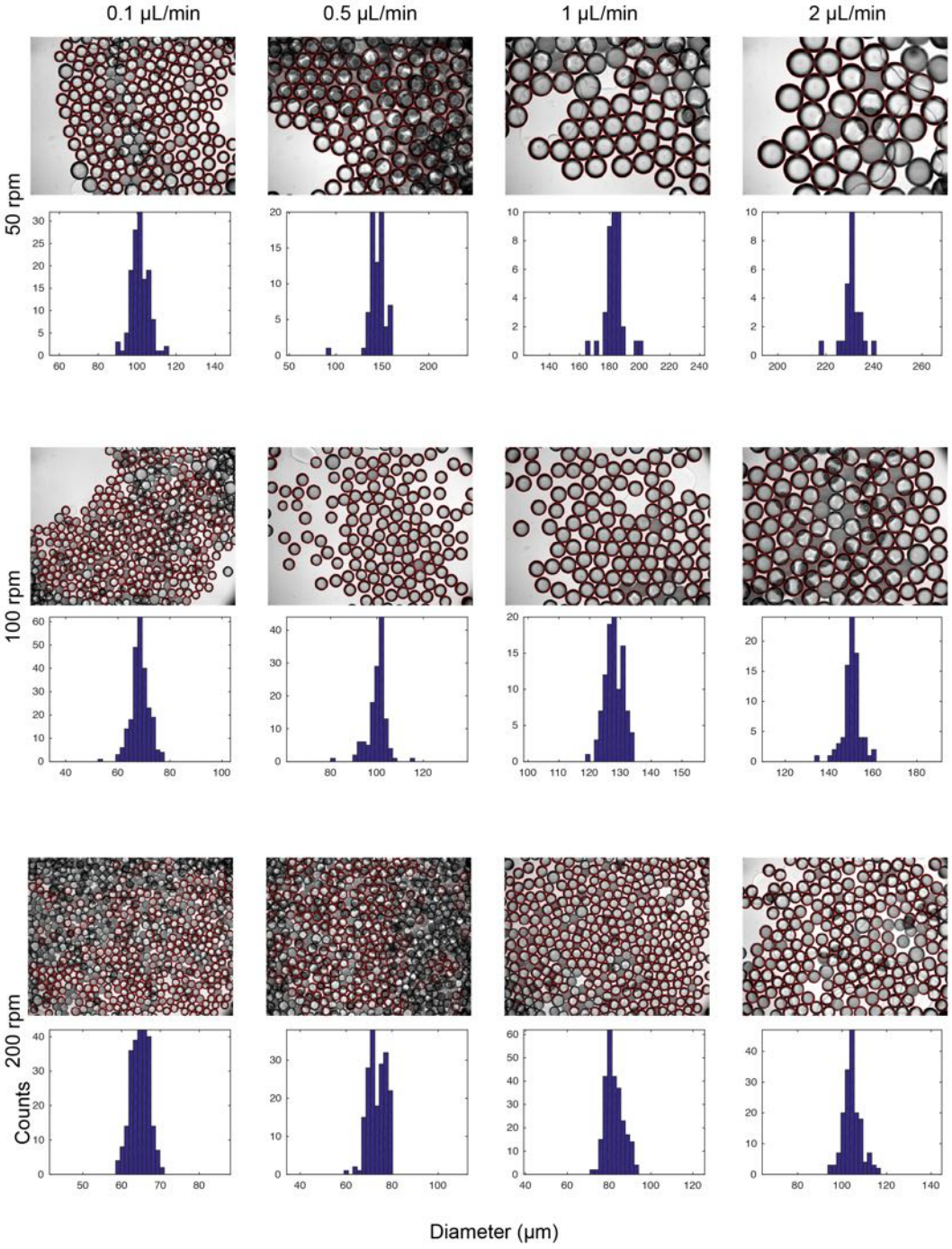
0.1 μL/min
0.5 μL/min
1 μL/min
2 μL/min
50 rpm
100 rpm
200 rpm
Counts
Diameter (μm)

Cont.

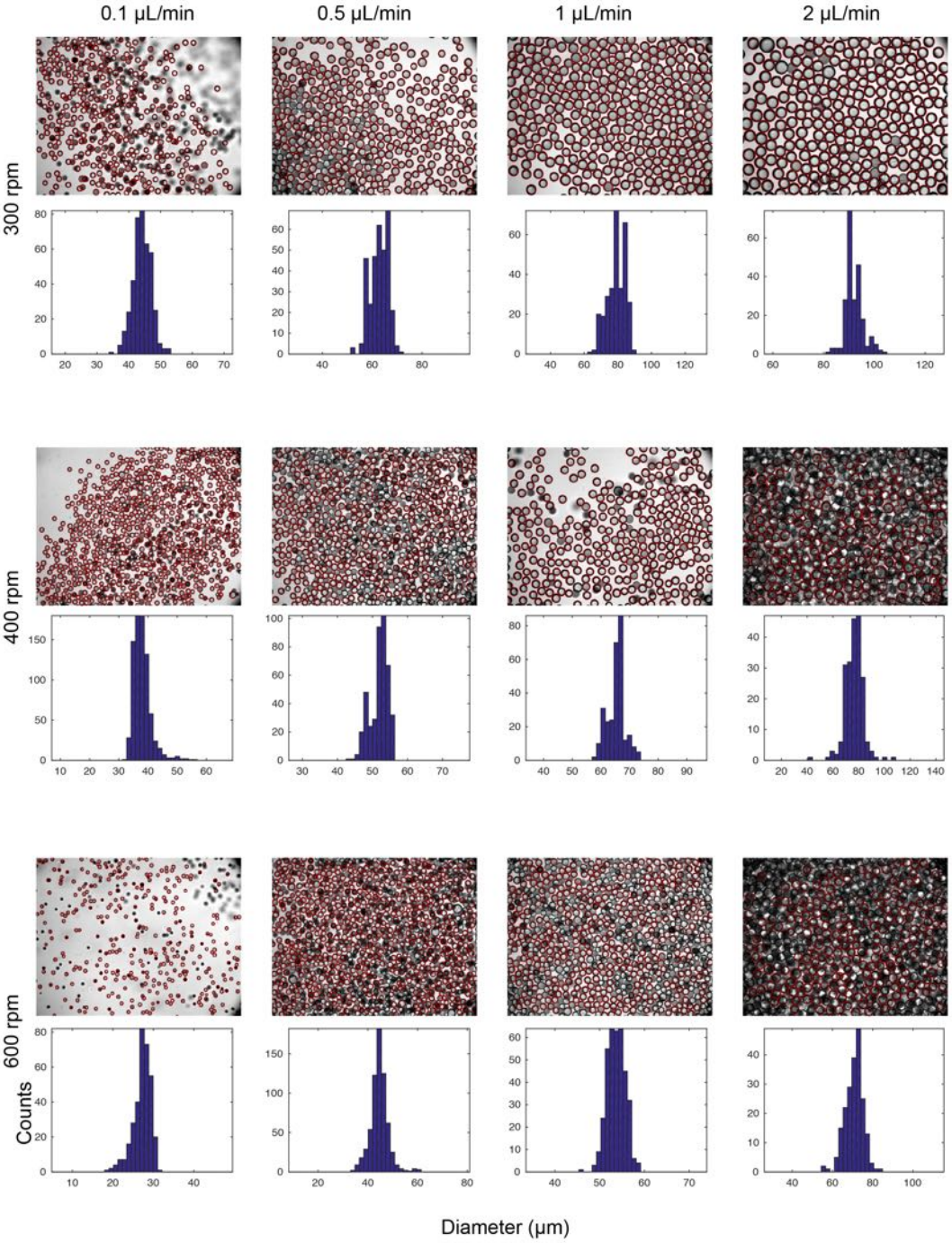

Figure S2. Microscopic observation and size distribution of the w/o emulsion droplet generated by SiMPLE generator.

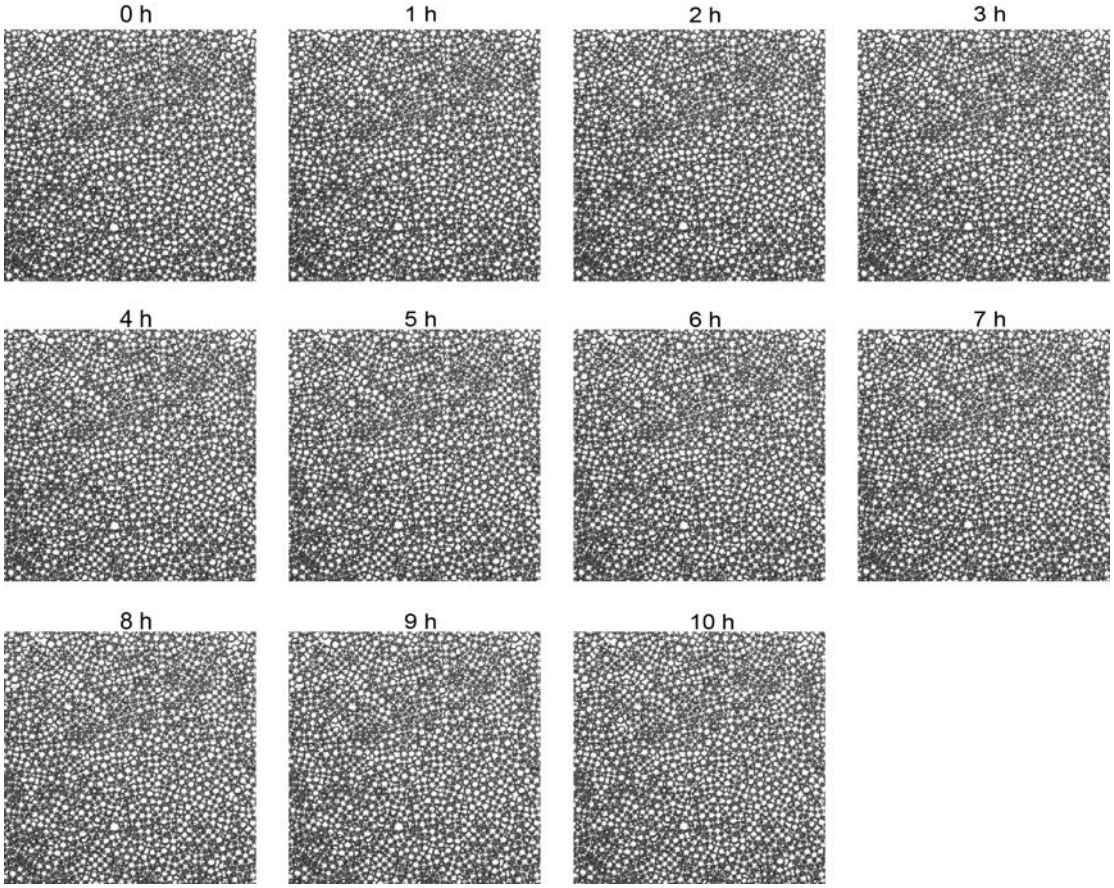

Figure S3. Stability of w/o emulsion. The generated emulsion are placed in Nunc TopYield strips for microscopic imaging. Microphotographs (field of view 1.5 mm x 1.5 mm) are taken at the 1 h interval for 10 h. No noticeable fusion of fission of the droplets has been observed during this period of time.

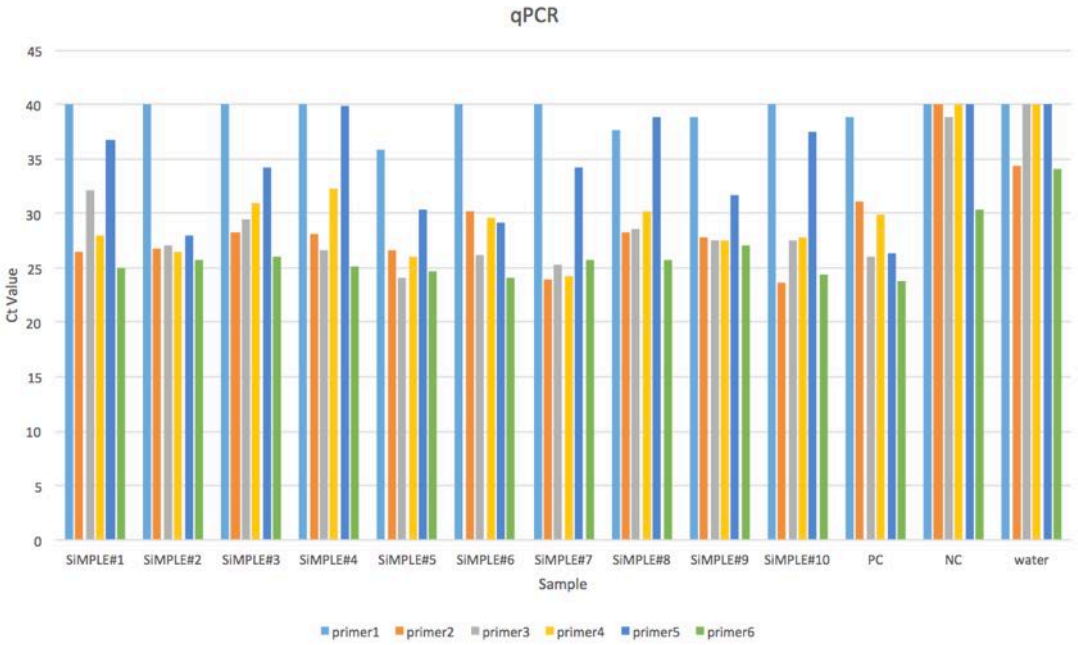

Figure S4. The quantitate PCR result of the amplified products of single cells.

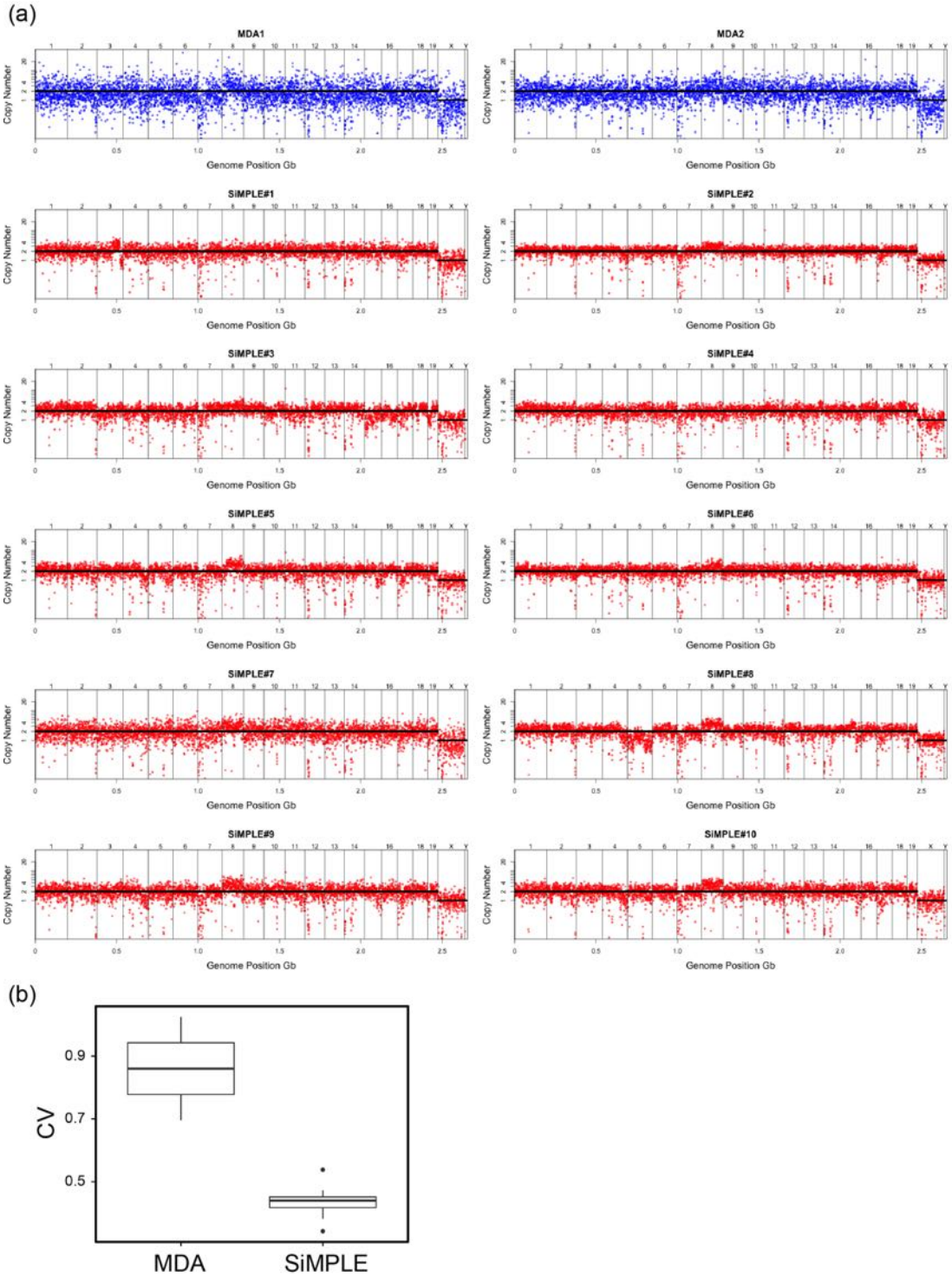

Figure S5. (a) The coverage distribution across the whole genome of the sequencing results of single cells, with two single-cell MDA samples for comparison. (b) The coefficient of variation (CV) of the coverage flutuation using different amplificaiton methods.