This journal is © The Royal Society of Chemistry 2011

Supplementary information

How Far Can Hydroxyl Radicals Travel? An Electrochemical Study Based on DNA Mediated Electron Transfer Process

Experimental

Chemicals

Titanium tetraisopoxide ($Ti(iPro)_4$, Sigma-Aldrich), $FeCl_2 \cdot 4H_2O$, $FeCl_3 \cdot 6H_2O$, cetyltrimethylammonium bromide (CTAB) (Tianjin Kemel Reagent Co.), N-Ethyl-N0-(3-(dimethylamino)propyl) carbodiimide hydrochloride (EDC) (Aladdin Co., Shanghai, ~97%), 6-mercaptohexanol (MCH, Aladdin Co., 98%), N-hydroxysuccinimide (NHS, Aladdin Co., 98%), MB (Aladdin Co.), 3-(3,4-Dihydroxyphenyl) propionic acid (DPA, Alfa Aesar Co.), antioxidants glutathione (Sigma), trolox (Fluka) were used as received. All the chemicals used in this work were at least analytical grade. The buffer used were made of sodium phosphate (Na_2HPO_4 and NaH_2PO_4, $[PO_4^{3-}]$ = 50 mM, PBS, pH 7.4) were dissolved in PBS. Water used in this work was prepared using Millipore pure water system.

Preparation of TiO_2@ γ-Fe_2O_3 core-shell particles

Synthesis of the TiO_2@ γ-Fe_2O_3 core-shell nanoparticles was modified from the procedures of preparation of porous silica capsulated iron oxide nanoparticles.[1] Synthesize iron oxide core and then the titanium oxide shell coating.

1. Synthesis of iron oxide (Fe_3O_4) core

Water-in-oil emulsion method was used to synthesize iron oxide core particles. Under vigorous stirring, CTAB (7.3 g, 0.02 mol) was added into 100.0 g of toluene to obtain suspension of CTAB in toluene. $FeCl_2 \cdot 4H_2O$ (0.254 g, 1.275 mmol) and $FeCl_3 \cdot 6H_2O$ (0.691 g, 2.55 mmol) were dissolved in deionized water (7 g). Under nitrogen gas, this solution was added dropwise into the toluene suspension of CTAB and the mixed solution was stirred continuously for 4 hrs. After slowly addition of 1.0 mL (0.88 g) of $NH_3 \cdot H_2O$ (35% in water) under a nitrogen atmosphere, the mixed solution turned black and suspension of Fe_3O_4 particles were formed.

2. Formation of TiO_2 shell

2 hours after addition of $NH_3 \cdot H_2O$, 9.8 mL of $Ti(iPro)_4$ was added slowly to the reaction mixture, and then the mixture was maintained for 1 hr under nitrogen gas. TiO_2 coating was formed at the surface of Fe_3O_4 particles (interface between water and toluene). After aged for 5 days at ambient conditions and with constant stirring, the emulsion was destroyed by addition of 20 mL of ethanol. The black solid product was separated by centrifugation and the supernatant was discarded. After repeatedly washed with ethanol, water and acetone, the black precipitates were separated by a magnet and then dried at room temperature. The dried black powder (Fe_3O_4@TiO_2) was calcined in Muffle furnace for 5 hrs at 300 °C. Under this condition, the hydrated TiO_2 coating would be transformed to anatase TiO_2, which has high photocatalytic activity.

Fe_3O_4 core would be transformed to γ-Fe_2O_3 and the color of the final powder product was deep brown and it was TiO_2@ γ-Fe_2O_3 as confirmed by X-Ray Diffraction (XRD) (Figure S1). XRD measurements of TiO_2@ γ-Fe_2O_3 was carried out on a Bruker D8 X-ray diffractometer using Cu Kα radiation (λ = 0.15406 nm). The sample containing ca.10 mg of catalysts was deposited on a Si wafer cut along the (511) plane. The XRD spectra were obtained using high resolution in the step-scanning mode with a narrow receiving slit (0.4°) with a counting time of 5 s per 1°. Scans were recorded in the 2θ range of 20~70°.

The obtained brown powder still showed a magnetic response upon exposure to a magnetic field. Using a Guoy balance (Instrument Co. of Nanjing University), the susceptibility of the magnetic TiO_2@ γ-Fe_2O_3 particles was measured and it was $6.5\times 10^{-5}\ m^{-3}\ kg^{-1}$.

A Hitachi-8100 TEM was applied to observe the morphology and size of TiO_2@ γ-Fe_2O_3 nanoparticles, and the accelerating voltage was 200 kV. The composition of the TiO_2@ γ-Fe_2O_3 particles was confirmed by energy dispersive X-ray analysis (EDAX) (Figure S2). The diameter of the composite nanoparticles was about 10 nm as shown in Figure S2 A.

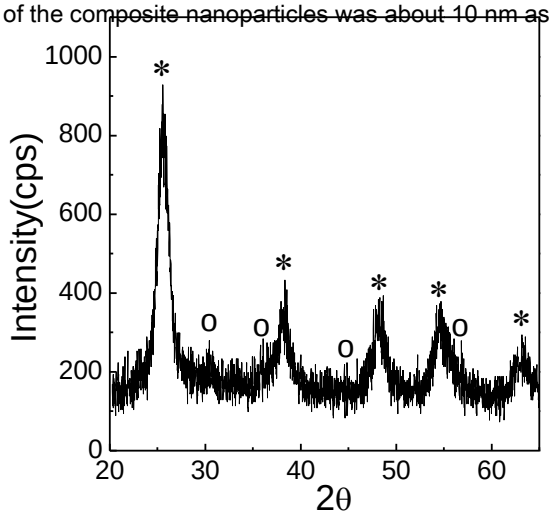

Figure S1. X-Ray Diffraction measurement of TiO_2@γ–Fe_2O_3. *: TiO_2(anatase), o: γ–Fe_2O_3.

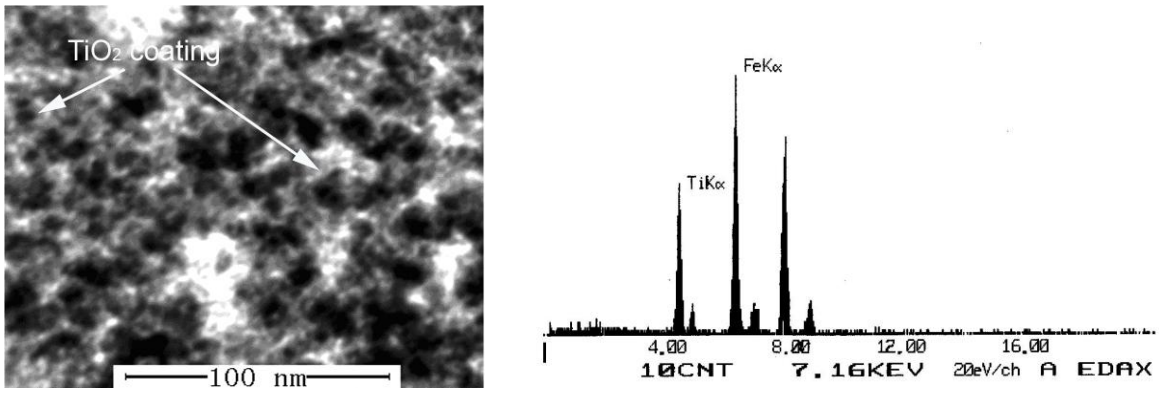

A B

Figure S2. A, TEM of TiO_2@γ-Fe_2O_3 particles. B, Energy dispersive X-ray spectrum of TiO_2@γ-Fe_2O_3 particles.

DNA

DNA samples were purchased from Sangon Biotech. Co. Ltd. (Shanghai) and the sequences were listed in Table S1.

Table S1. DNA sequence for each DNA modified surface

DNA modified surface	DNA Sequence
L1	5′-GGGCAGTGCCTCACAACCT-*p*-$(CH_2)_6$-SH-3′ 3′-CCCGTCACGGAGTGTTGGA-5′
L2	5′-GGGCAGTGCCTCACAACCT-*p*-$(CH_2)_6$-SH-3′ 3′-H_2N-$(CH_2)_6$-CCCGTCACGGAGTGTTGGA-5′
L3	5′-GGGCAGTGCCTCACAACCT-*p*-$(CH_2)_6$-SH-3′ 3′-H_2N-$(CH_2)_6$-ATATACCCGTCACGGAGTGTTGGA-5′
L4	5′-GGGCAGTGCCTCACAACCT-*p*-$(CH_2)_6$-SH-3′ 3′-H_2N-$(CH_2)_6$-TATATATATATACCCGTCACGGAGTGTTGGA-5′
L5	5′-GGGCAGTGCCTCACAACCT-*p*-$(CH_2)_6$-SH-3′ 3′-H_2N-$(CH_2)_6$-TATATATATATATATATATATATATCCCGTCACGGAGTGTTGGA-5′

Preparation of the dsDNA Modified Gold Electrode ($(AT)_n$/dsDNA/Au).

Au disk electrode (*d* = 2 mm, Shanghai Chenhua Instruments Co.) or sputtered Au film on slide glass were used as working electrodes. Au disk electrode was polished with α-Al_2O_3 powder (0.3 and 0.05 μm) and sonicated in 50% (by volume) ethanol, 50% (by volume) nitric acid aqueous solutions and Millipore water for 5 min, respectively. Finally, the Au electrode was subjected to electrochemical pretreatment by consecutive potential cycling in a 0.5 M H_2SO_4 solution within a potential window between −0.20 and +1.50 V (vs. Ag/AgCl) at 100mV/s. The cycling was continued until reproducible voltammograms were obtained. After cleaning, Au disk electrodes were immediately transferred to DNA solution.

Sputtered Au film electrode was fabricated using an Emitech K575X sputtering coater (Emitech Co. Ltd., UK). Slides were used to sputter coating Au nanofilm. The slide glass was cleaned in a chromosulfuric acid solution for 10 h and then rinsed with distilled water and dried in a gentle stream of N_2 gas. To improve the adhesion of the Au films onto the glass substrates, a thin Cr film (a few nm in thickness) was precoated on slide before coating Au film. Sputtered coating was carried out at a pressure of 8×10^{-4} Pa in high purity Ar (99.999%). In Cr coating step, Cr target was cleaned at a DC current of 150 mA for 1 min and then sputtering coated with a current of 150 mA for 1 min. In Au coating, sputtering current was 75 mA and sputtering time was 120 s. The thickness of Au film was a few nanometers. After Au film was coated, the wafers were covered with Scotch tapes to leave the working areas of 0.5×5 mm^2, and then immediately transferred to DNA solution.

Au electrode was modified by incubation in HS-ssDNA solution (5μM, in PBS) for 10–12 hrs. After rinsing with pure water, the ssDNA modified Au electrode was immersed in MCH (1 mM, in water) for 2 hrs to cover the bare gold surface to minimize any nonspecific adsorption. And then the modified Au electrode was put into solution of target ssDNA (5μM, in PBS) to allow DNA hybridization carried out for 10–12 hrs. After rinsing with water and PBS, the dsDNA modified Au electrode (denoted as $(AT)_n$/dsDNA/Au) was ready for use in the subsequent steps.

Preparation of TiO_2@γ-Fe_2O_3 core-shell particle attached dsDNA modified Au electrode (TiO_2@γ-Fe_2O_3/

$(AT)_n$/dsDNA/Au).

The dsDNA used to bond TiO_2@γ-Fe_2O_3 core-shell particles were L2, L3, L4, L5 (Table S1), respectively, which has $–NH_2$ group terminated $(AT)_n$/dsDNA/Au surface. The linking of $–NH_2$ terminated $(AT)_n$/dsDNA with the particles was achieved by using linking enediol ligands, such as DPA and the procedure was shown in Scheme 1.

A 20 mM DPA solution containing 5 mM EDC and 10 mM NHS was prepared in PBS, pH 5.5, and held in darkness for 6 h to activate the carboxylic acid groups of DPA. And then dsDNA/Au modified electrode with $–NH_2$ group terminated surface was immersed into activated DPA solution to graft DPA on the out surface of dsDNA/Au and form a DPA–$(AT)_n$/dsDNA/Au modified electrode. After removal from the solution, the modified electrode was thoroughly washed with water to remove the physically adsorbed species and then was used for attach TiO_2@γ-Fe_2O_3 core-shell particles (suspension of TiO_2@ γ-Fe_2O_3). Molecules with enediol ligands can bind to TiO_2 nanoparticles stably,[2, 3] and the surface coordination reaction has been used to prepare DNA covalently attached TiO_2 nanoparticles composites.[3] Here, the DPA–$(AT)_n$/dsDNA/Au modified electrode has an enediol group terminated surface, where TiO_2@γ-Fe_2O_3 core-shell particles were attached to form TiO_2@γ-Fe_2O_3/$(AT)_n$/dsDNA/Au upon immersion of DPA–$(AT)_n$/dsDNA/Au into suspension of TiO_2@γ-Fe_2O_3. The prepared TiO_2@γ-Fe_2O_3/$(AT)_n$/dsDNA/Au assembly had a uniform and compact nanoparticles layer as observed using scanning electron microscopy (SEM, XL 30 ESEM FEG, Philips, Netherlands) as shown in Figure S3.

The preparation of the dsDNA modified gold electrode, phtocatalytic reaction and electrochemistry were conduted at room temperature around 20 ℃.

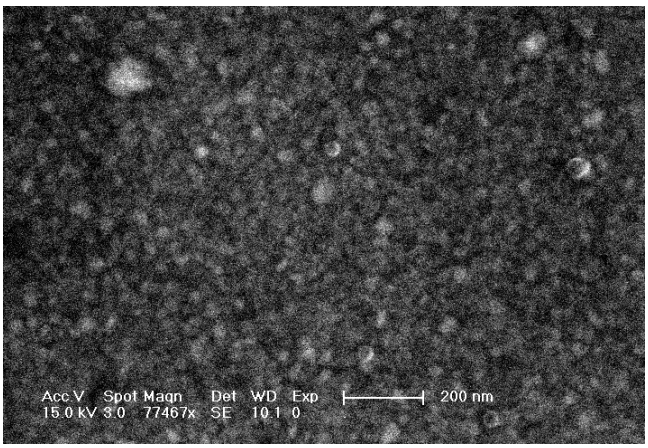

Figure S3. SEM observation of TiO_2@γ–Fe_2O_3/$(AT)_n$/dsDNA/Au modified electrode.

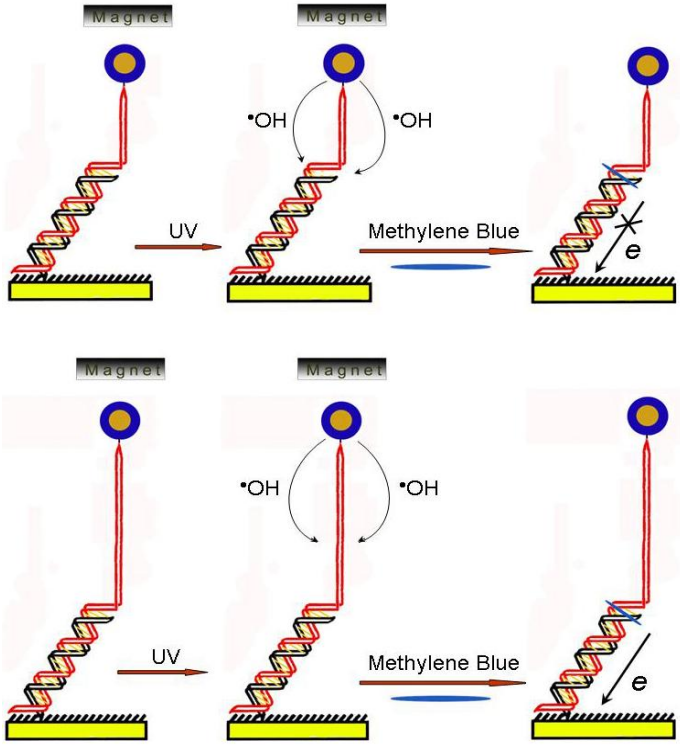

Scheme S1. The single-stranded part of DNA ($(AT)_n$, n = 5, 12, 24) acted as a spacer between base pair in the dsDNA film and the γ–Fe_2O_3@TiO_2 particle when placed a magnet above the modified surface. Top, $n < 12$; bottom, $n > 12$.

Effect of the ssDNA length (AT)n

The results of (AT)5 and (AT)12 were listed in Figure 1 to give a sharp comparision in current signals. When n was above 12, the current signal approximated that of (AT)24 as discussed in text. When n was 7, 9, the current signals were about 60%, 75% of that of (AT)12, indicating a obvious damage of DNA by •OH.

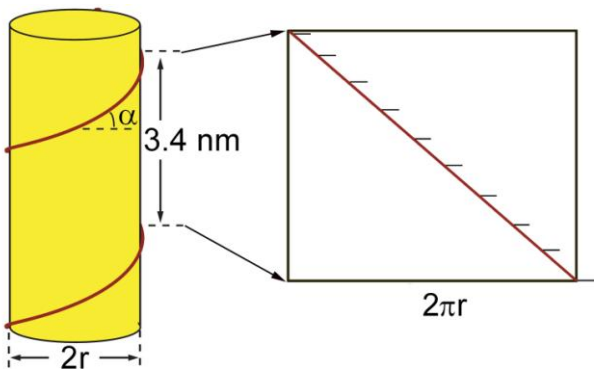

Scheme S2. Elastic rod model of dsDNA to read the distance between bases.

This journal is © The Royal Society of Chemistry 2011

References

(1) Tsang, S. C.; Yu, C. H.; Gao, X.; Tam, K. *J. Phys. Chem. B* **2006**, *110*, 16914-16922.

(2) Rajh, T.; Chen, L. X.; Lukas, K.; Liu, T.; Thurnauer, M. C.; Tiede, D. M. *J. Phys. Chem. B* **2002**, *106*, 10543-10552.

(3) Paunesku, T.; Rajh, T.; Wiederrecht, G.; Maser, J.; Vogt, S.; Stojicevic, N.; Protic, M.; Lai, B.; Oryhon, J.; Thurnauer, M.; Woloschak, G. *Nat. Mater.* **2003**, *2*, 343-346.