Electronic Supplementary Material for PCCP
This journal is © The Owner Societies 2009

Supplementary Information

Aluminum Siting in the ZSM-5 Framework by Combination of High Resolution ^{27}Al NMR and DFT/MM calculations

Stepan Sklenak,*[a] Jiří Dědeček,[a] Chengbin Li,[a] Blanka Wichterlová,[a] Vendula Gábová,[a] Marek Sierka,[b] and Joachim Sauer[b]

[a] *J. Heyrovský Institute of Physical Chemistry of the Academy of Sciences of the Czech Republic, v.v.i., Dolejškova 3, 182 23 Prague, Czech Republic.*

E-mail: stepan.sklenak@jh-inst.cas.cz

[b] *Institut für Chemie, Humboldt-Universität zu Berlin, Unter den Linden 6, 10099 Berlin, Germany*

This journal is © The Owner Societies 2009

Table S1 Structure directing agent and aluminum, silicon and sodium sources used for the synthesis of zeolites

zeolite	structure directing agent	Al source	Si source	Na source mmol/100g
Na-ZSM-5/A	tetrapropylammonium hydroxide	$Al(NO_3)_3$	tetraethylorthosilicate	
Na-ZSM-5/B†				
Na-ZSM-5/C	tetrapropylammonium hydroxide	Al isopropoxide	tetraethylorthosilicate	
Na-ZSM-5/D	tetrapropylammonium hydroxide	$AlCl_3$	tetraethylorthosilicate	
Na-ZSM-5/E	tetrapropylammonium hydroxide	$AlCl_3$	tetraethylorthosilicate	NaOH 56
Li-ZSM-5/E				
H-ZSM-5/E				
Na-ZSM-5/F	tetrapropylammonium hydroxide	$AlCl_3$	tetraethylorthosilicate	NaOH 6
Na-ZSM-5/G	tetrapropylammonium hydroxide	$AlCl_3$	Sodium silicate	
Na-ZSM-5/H†				
Na-ZSM-5/I	tetrapropylammonium hydroxide	$AlCl_3$	tetraethylorthosilicate	Na_2CO_3 56
Na-ZSM-5/J	tetrapropylammonium bromide	$AlCl_3$	tetraethylorthosilicate	
Na-ZSM-5/K†				

† Na-ZSM-5/B was purchased from Conteca, Na-ZSM-5/H was provided by the Institute of Oil and Hydrocarbon Gases, Slovnaft and ZSM-5/K by the Research Institute of Inorganic Chemistry Inc., Unipetrol

This journal is © The Owner Societies 2009

Table S2 Force field relative energies (kcal/mol) of Al in the T-sites of ZSM-5

T site	energy	T site	energy	T site	energy
T1	6.2	T9	4.9	T17	6.8
T2	5.2	T10	2.6	T18	9.8
T3	4.5	T11	2.5	T19	2.0
T4	2.1	T12	4.0	T20	2.7
T5	0.2	T13	0.0	T21	2.5
T6	2.5	T14	4.0	T22	3.4
T7	1.1	T15	4.5	T23	3.3
T8	3.0	T16	2.7	T24	4.1

This journal is © The Owner Societies 2009

Table S3 Al-O-Si angles (degrees) for the T sites of ZSM-5

T site	T-O-T angles			
1	137.7	138.1	140.3	158.0
2	139.7	141.5	148.2	149.9
3	132.2	135.9	144.5	148.4
4	140.9	151.4	151.8	161.3
5	137.0	146.4	146.9	148.3
6	133.2	148.7	150.7	169.4
7	137.7	139.5	143.2	152.9
8	142.0	146.6	151.1	156.8
9	124.4	147.3	152.5	152.8
10	138.5	146.5	148.8	150.5
11	140.6	147.2	148.8	149.6
12	135.1	140.8	147.6	149.2
13	133.1	144.2	149.1	151.2
14	135.1	137.3	146.5	150.7
15	132.8	141.5	165.3	174.2
16	133.7	145.5	146.3	150.3
17	136.4	137.6	138.5	150.5
18	128.9	142.8	144.9	164.2
19	134.7	141.1	142.5	151.8
20	152.1	153.8	154.9	156.4
21	144.1	147.5	150.2	151.1
22	138.0	139.8	144.8	144.9
23	143.2	145.9	146.7	147.3
24	132.8	135.7	140.2	150.6

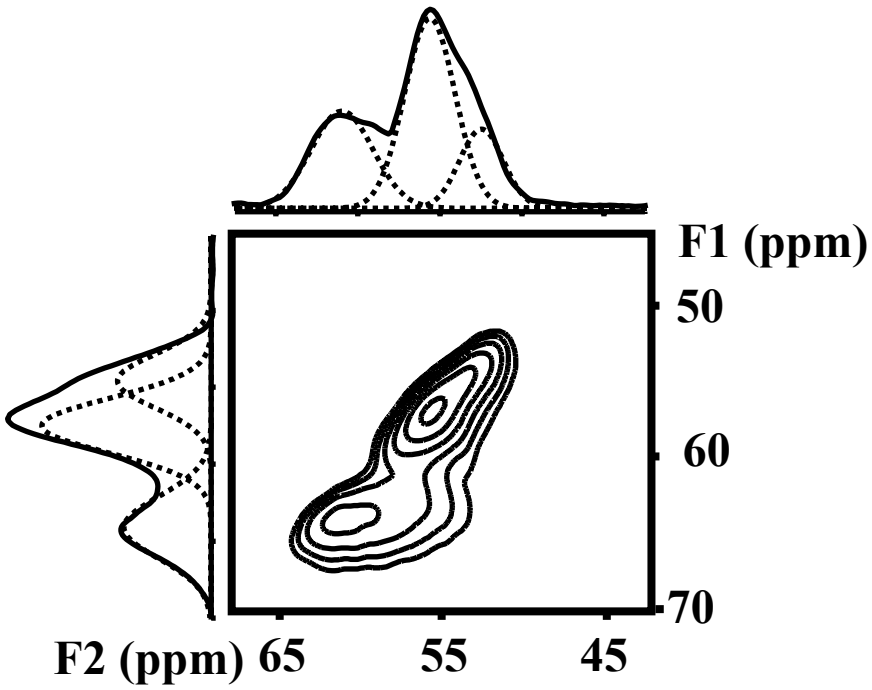

Fig. S1a 2D plot of the ^{27}Al 3Q MAS NMR sheared spectrum of Na-ZSM-5/A, F1 and F2 projections of the spectrum and projection simulations.

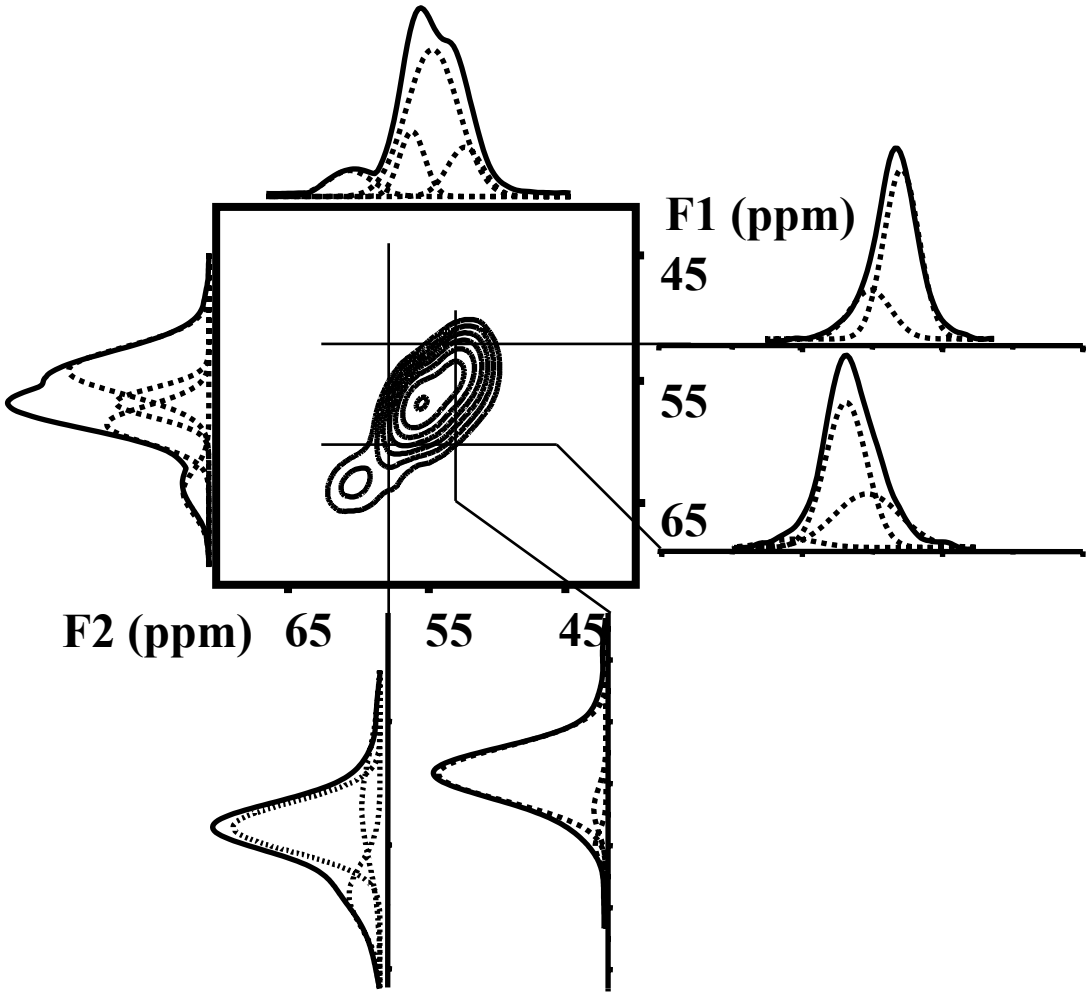

Fig. S1b 2D plot of the ^{27}Al 3Q MAS NMR sheared spectrum of Na-ZSM-5/B, F1 and F2 projections of the spectrum and selected normalized slices and projection and slice simulations.

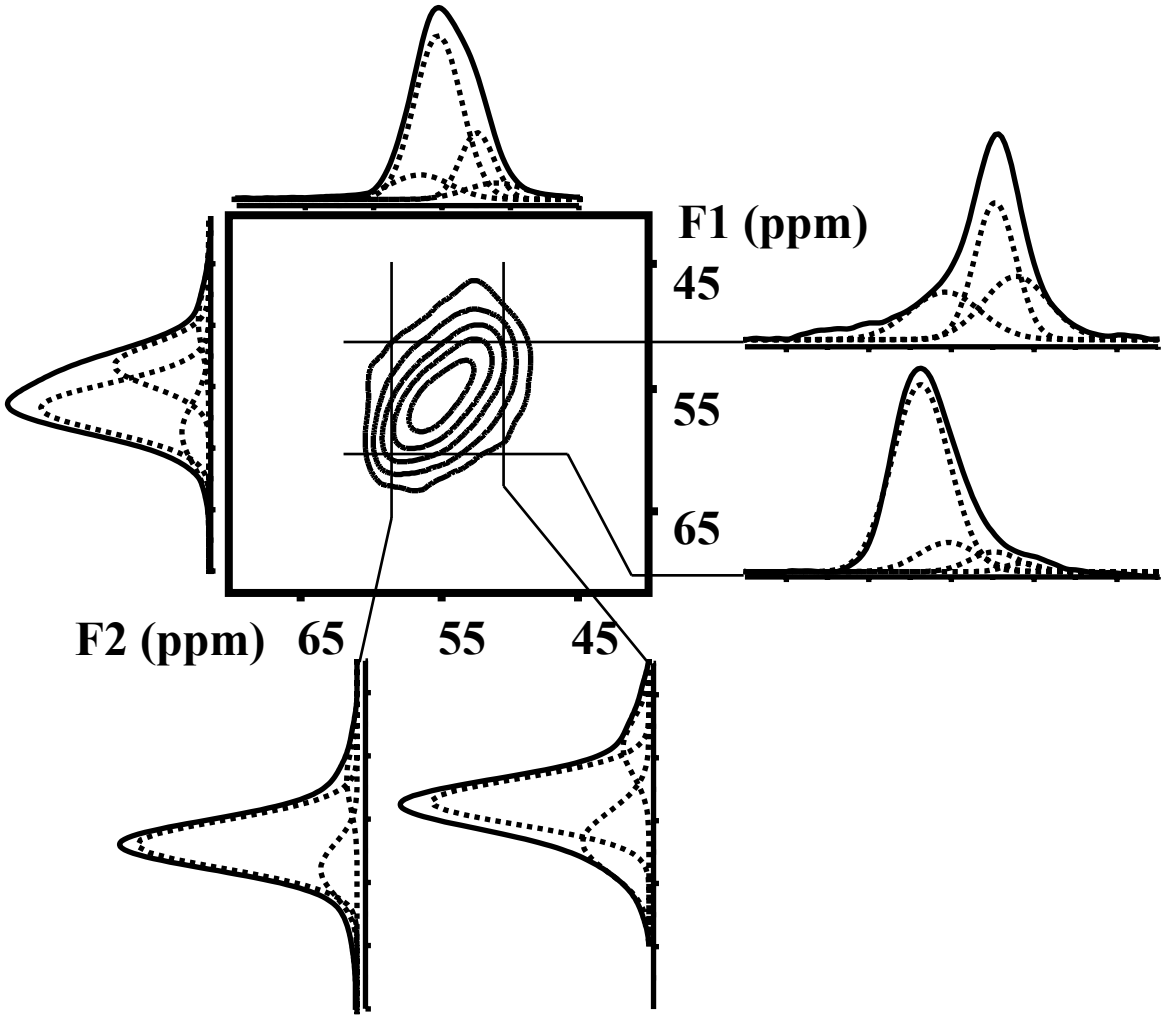

Fig. S1c 2D plot of the ^{27}Al 3Q MAS NMR sheared spectrum of Na-ZSM-5/C, F1 and F2 projections of the spectrum and selected normalized slices and projection and slice simulations.

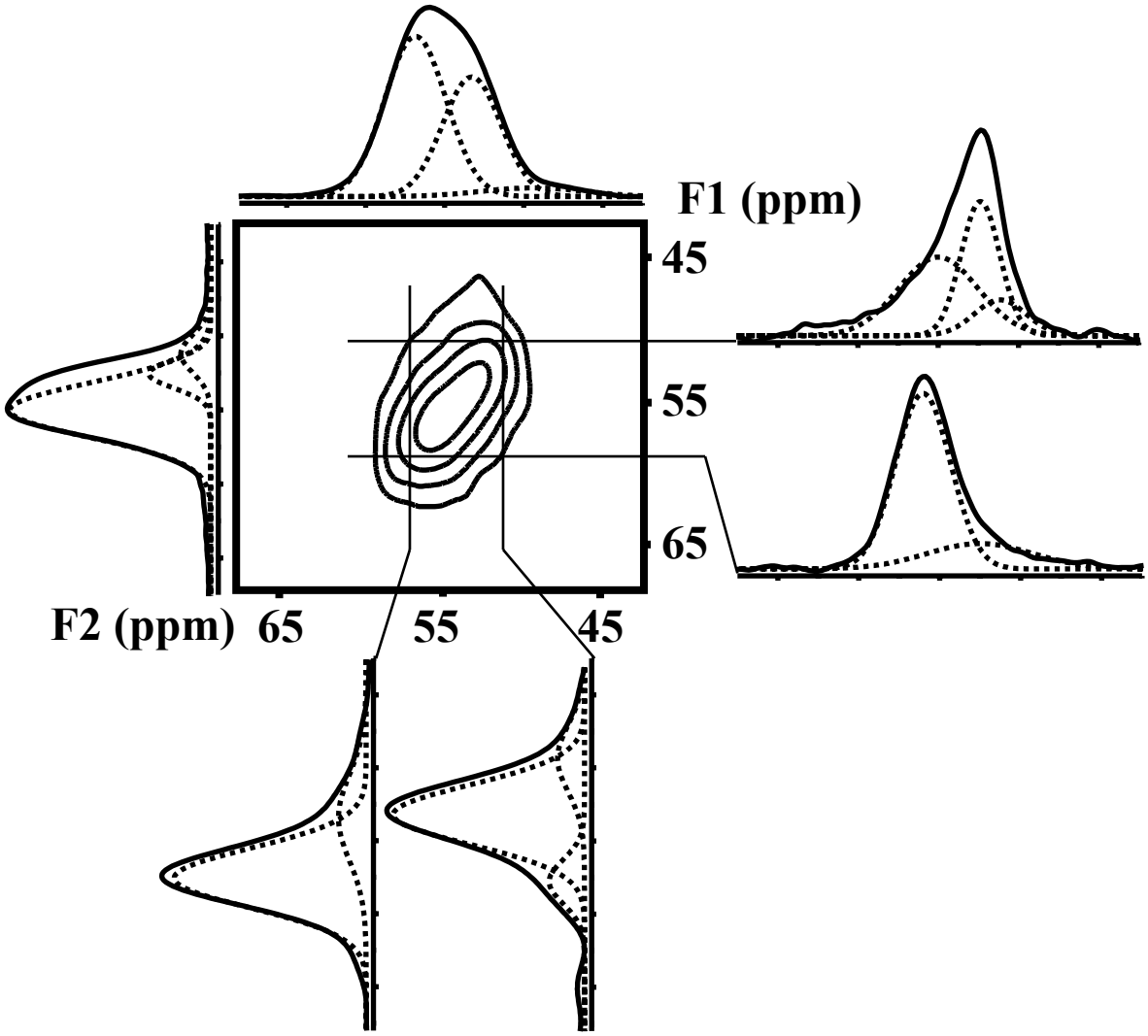

Fig. S1d 2D plot of the ^{27}Al 3Q MAS NMR sheared spectrum of Na-ZSM-5/D, F1 and F2 projections of the spectrum and selected normalized slices and projection and slice simulations.

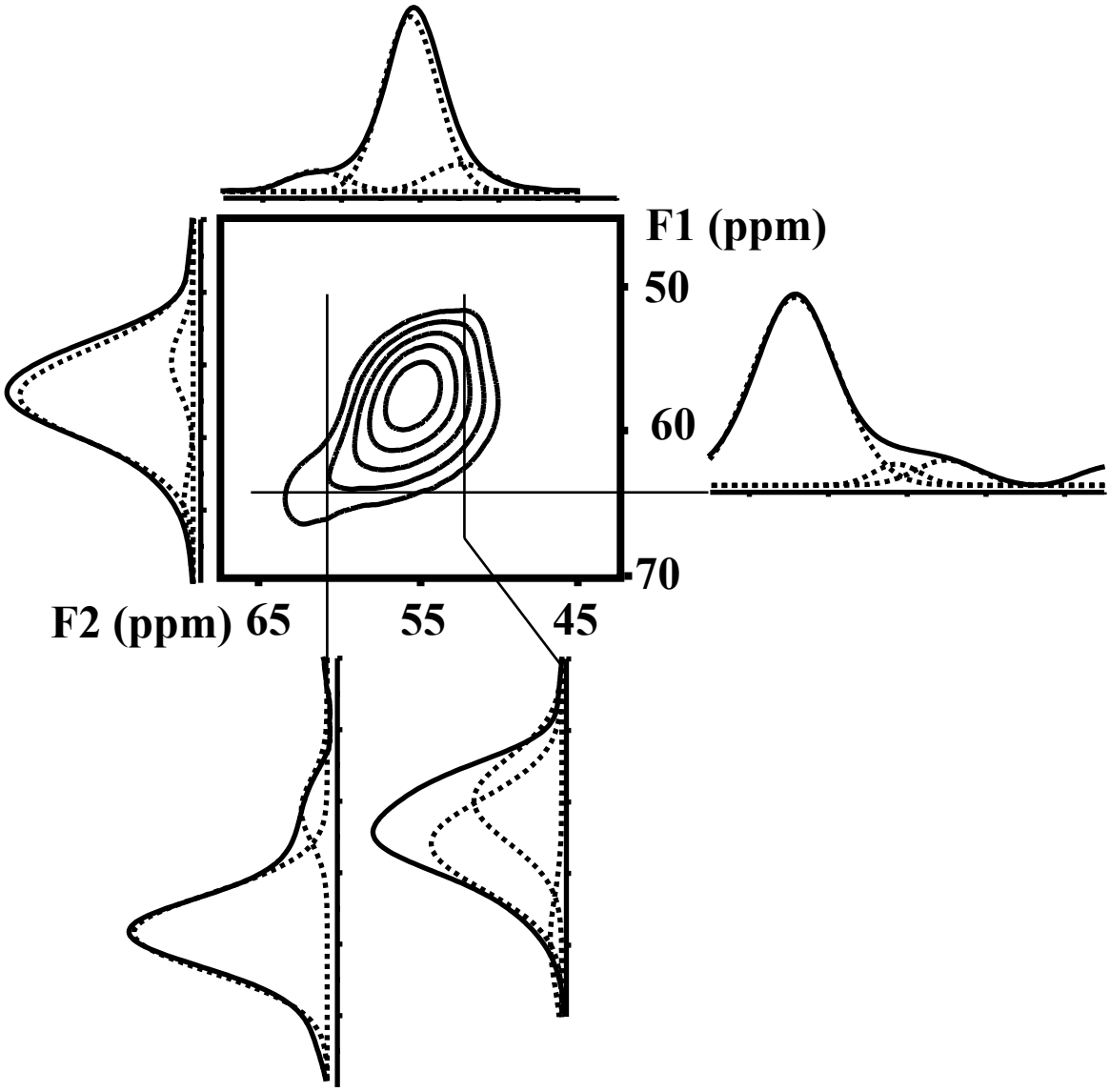

Fig. S1e 2D plot of the ^{27}Al 3Q MAS NMR sheared spectrum of Na-ZSM-5/E, F1 and F2 projections of the spectrum and selected normalized slices and projection and slice simulations.

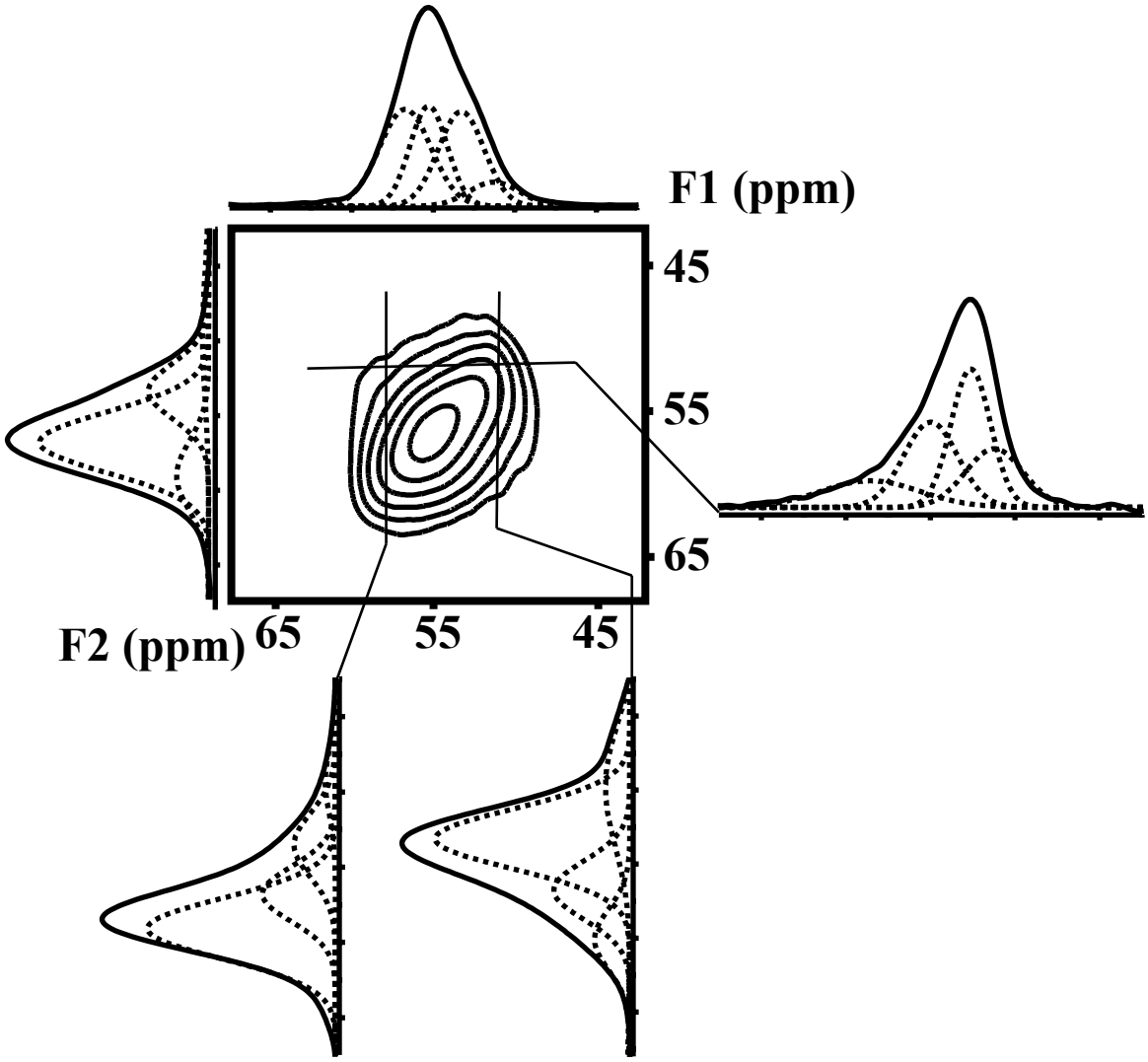

Fig. S1f 2D plot of the ^{27}Al 3Q MAS NMR sheared spectrum of Na-ZSM-5/F, F1 and F2 projections of the spectrum and selected normalized slices and projection and slice simulations.

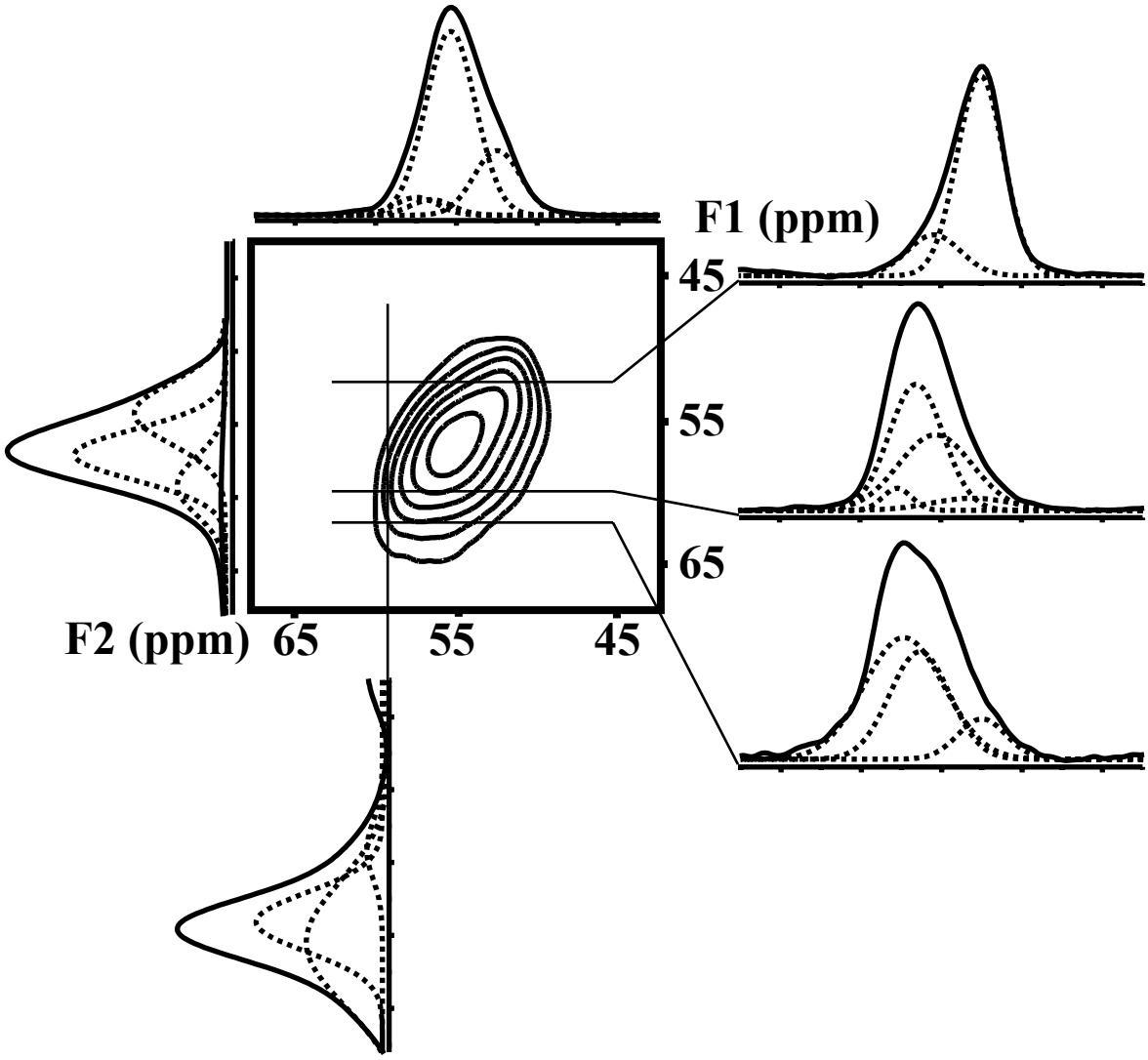

Fig. S1g 2D plot of the ^{27}Al 3Q MAS NMR sheared spectrum of Na-ZSM-5/G, F1 and F2 projections of the spectrum and selected normalized slices and projection and slice simulations.

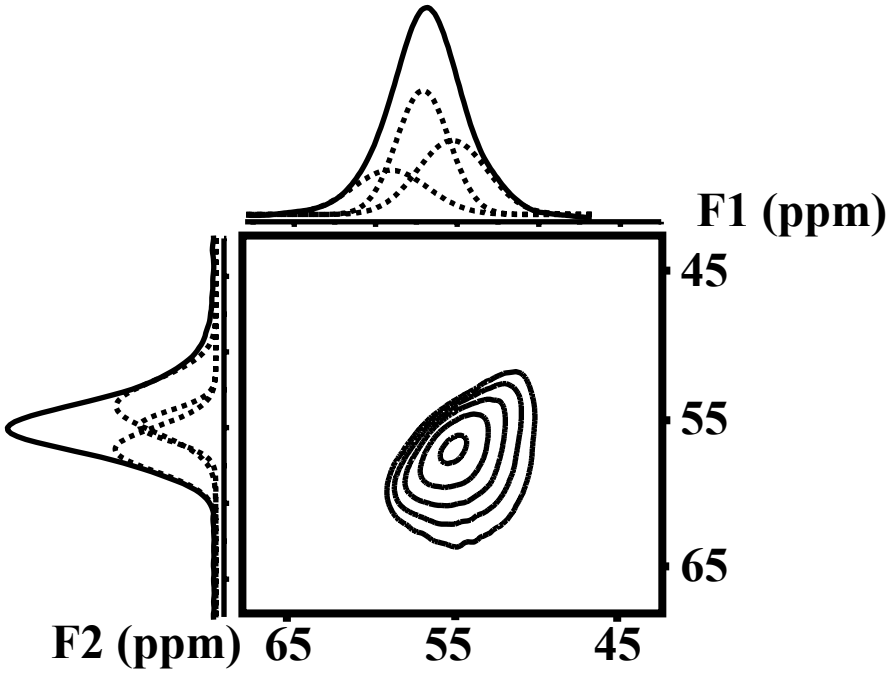

Fig. S1h 2D plot of the ^{27}Al 3Q MAS NMR sheared spectrum of Na-ZSM-5/I, F1 and F2 projections of the spectrum and projection simulations.

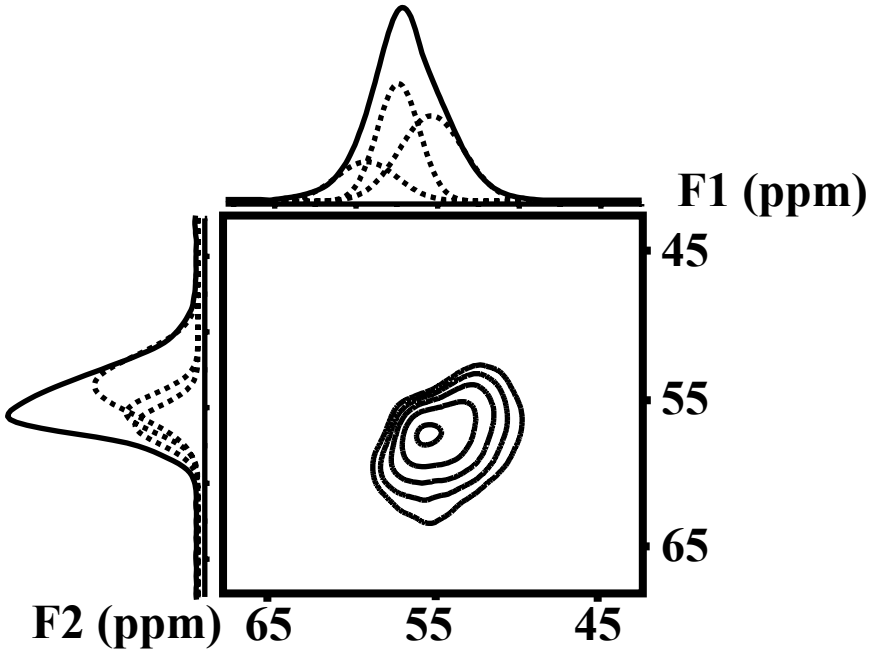

Fig. S1i 2D plot of the ^{27}Al 3Q MAS NMR sheared spectrum of Na-ZSM-5/J, F1 and F2 projections of the spectrum and projection simulations.

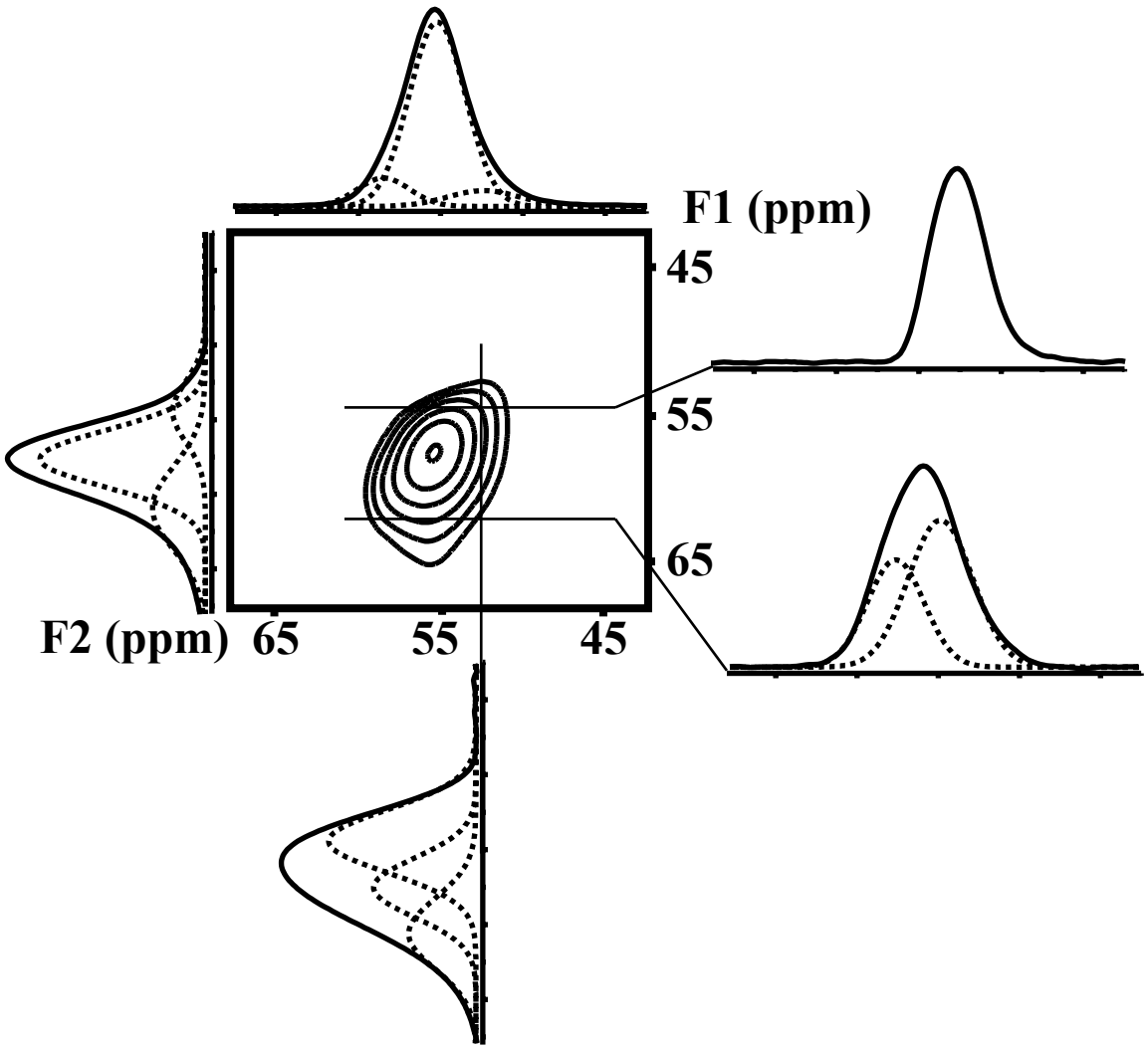

Fig. S1j 2D plot of the ^{27}Al 3Q MAS NMR sheared spectrum of Na-ZSM-5/K, F1 and F2 projections of the spectrum and selected normalized slices and projection and slice simulations.

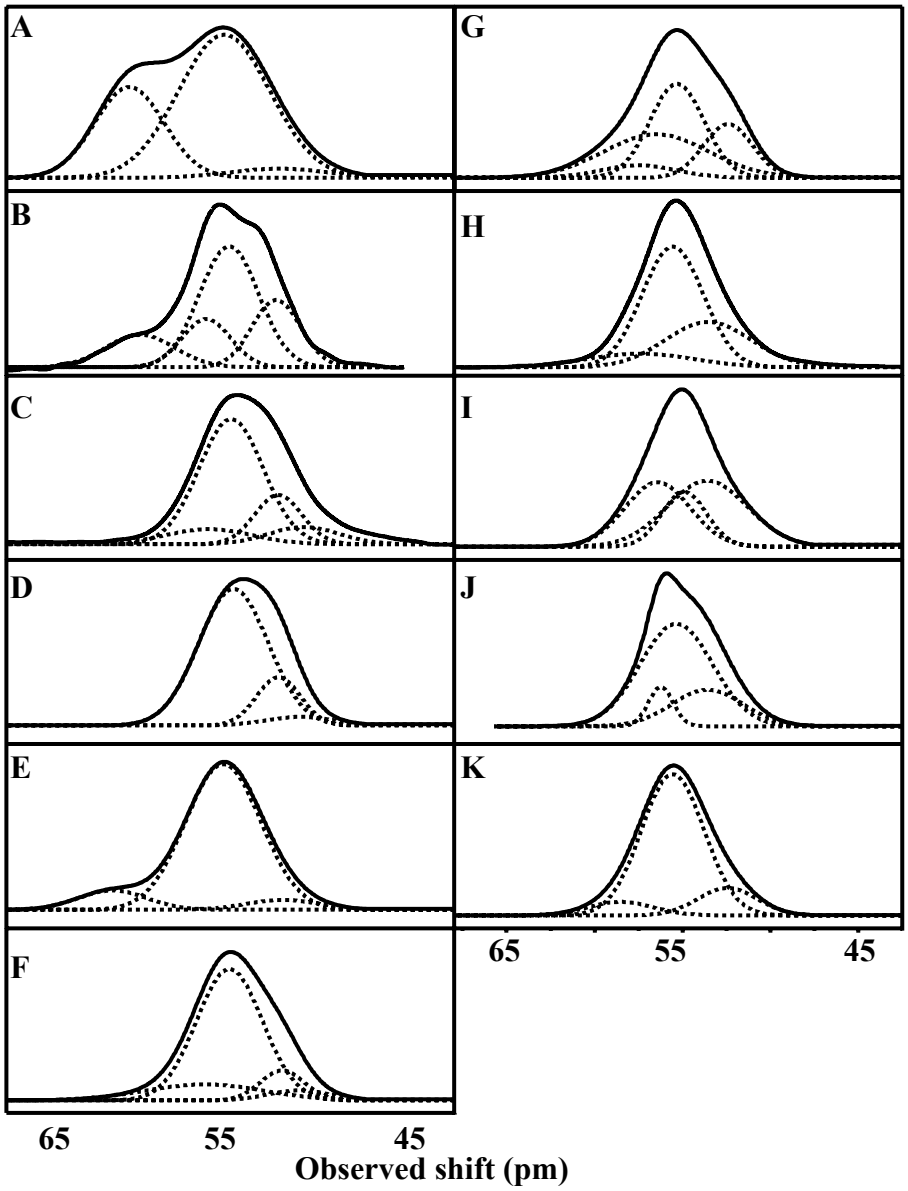

Fig. S2 Simulations of ^{27}Al single pulse spectra of Na-ZSM-5 zeolites and corresponding individual Gaussian lines.

Reference 70 with the complete list of authors:

Frisch, M. J.; Trucks, G. W.; Schlegel, H. B.; Scuseria, G. E.; Robb, M. A.; Cheeseman, J. R.; Montgomery, J., J. A. ; Vreven, T.; Kudin, K. N.; Burant, J. C.; Millam, J. M.; Iyengar, S. S.; Tomasi, J.; Barone, V.; Mennucci, B.; Cossi, M.; Scalmani, G.; Rega, N.; Petersson, G. A.; Nakatsuji, H.; Hada, M.; Ehara, M.; Toyota, K.; Fukuda, R.; Hasegawa, J.; Ishida, M.; Nakajima, T.; Honda, Y.; Kitao, O.; Nakai, H.; Klene, M.; Li, X.; Knox, J. E.; Hratchian, H. P.; Cross, J. B.; Bakken, V.; Adamo, C.; Jaramillo, J.; Gomperts, R.; Stratmann, R. E.; Yazyev, O.; Austin, A. J.; Cammi, R.; Pomelli, C.; Ochterski, J. W.; Ayala, P. Y.; Morokuma, K.; Voth, G. A.; Salvador, P.; Dannenberg, J. J.; Zakrzewski, V. G.; Dapprich, S.; Daniels, A. D.; Strain, M. C.; Farkas, O.; Malick, D. K.; Rabuck, A. D.; Raghavachari, K.; Foresman, J. B.; Ortiz, J. V.; Cui, Q.; Baboul, A. G.; Clifford, S.; Cioslowski, J.; Stefanov, B. B.; Liu, G.; Liashenko, A.; Piskorz, P.; Komaromi, I.; Martin, R. L.; Fox, D. J.; Keith, T.; Al-Laham, M. A.; Peng, C. Y.; Nanayakkara, A.; Challacombe, M.; Gill, P. M. W.; Johnson, B.; Chen, W.; Wong, M. W.; Gonzalez, C.; Pople, J. A., *Gaussian 03*, Revision C.02, Gaussian, Inc., Wallingford CT, 2004.