Electronic Supplementary Material (ESI) for Physical Chemistry Chemical Physics.
This journal is © the Owner Societies 2014

Supporting Information

Durability, inactivation and regeneration insight of silver tetratantalate in photocatalytic H_2 evolution

Hongjun Dong,[ab] Gang Chen,*[a] Jingxue Sun,*[a] Chunmei Li,[a] Chade Lv[a] and Yidong Hu[a]

a Department of Chemistry, Harbin Institute of Technology, Harbin 150001, P. R. China
b Department of Chemistry, Baicheng Normal University, Baicheng 137000, P. R. China

Experimental Section

Silver tetra-tantalate ($Ag_2Ta_4O_{11}$) was synthesized using a typical solid phase reaction method. $AgNO_3$ and Ta_2O_5 were weighed out in an appropriate stoichiometric ratio and ground together in mortar until the mixture was homogeneous mixing. The mixture was then placed in a corundum crucible and heated at 500 °C in an electric furnace in the air. After heating 5 h, the sample was removed and vigorously ground for 30 min. The sample was further calcined again for an additional 24 h at 1000 °C. The white product was obtained. The regeneration of $Ag_2Ta_4O_{11}$ was achieved by the used sample undergoing a re-calcination process of 4h at 1000 °C.

The phase of the $Ag_2Ta_4O_{11}$ sample was characterized by powder X-ray diffractometer (XRD, Rigaku D/max-2000) equipped with a Cu-Kα radiation at a scanning rate of 5° min^{-1} in the 2θ range of 10-90°. The morphology of sample was characterized utilizing field-emission scanning electron microscopy (FESEM, MX2600FESEM) and transmission electron microscopy (TEM, FEI, Tecnai G2 S-Twin). X-ray photoelectron spectroscopy (XPS) analysis was measured on an American electronics physical HI5700ESCA system with X-ray photoelectron spectroscope using Al Kα (1486.6 eV) monochromatic X-ray radiation. The peak positions were corrected against the C 1s peak (284.6 eV) of contaminated carbon.

The water splitting was performed in a quartz reactor connected to a glass closed gas circulation system. The 0.1 g photocatalyst was suspended in 100 mL redistilled water and put into the quartz reactor after ultrasonic 30 min. Reactive system was evacuated several times to completely remove any air prior to light irradiation using a connective vacuum pump. An unfiltered Xe lamp (300 W) is served as simulated sunlight source and the corresponding light intensity at the sample surface is 247 mW cm^{-2}. The reactive solution was continually stirred and maintained at 5 ℃ by a water bath and ~ -97.5 Kpa vacuum environments during the H_2-production process. The evolved gas was analyzed by a gas chromatography (GC) connecting with the reaction system.

For the cycle experiments for 5 day, firstly, we put the 100 ml water with 0.1g photocatalyst into the reactor. After sealing up, we vacuumize the whole reaction system using a connective vacuum pump, and then perform the first H_2 evolution experiment of 24 h. We sampling by the automatic sample injection controller every 1 h and record the peak area of detection signal in GC. Finally, we calculate the amount of H_2-production using the linear relation formula between the peak area and H_2 yield. After the first circle operation, we put air into the reaction system using the vent valve, then re-seal up and vacuumize the whole reaction system to prevent from air leak owing to the prolonged reaction. We perform the second circle H_2-production operation for 24 h.

The following operations are similar to the second. For the cycle experiments for 30 day, we carry out the stability tests in the air environments employing an 'interval experiment'. The specific approach is that 1 g photocatalyst is evenly dispersed in 250 ml water and exposed to the unfiltered Xe lamp (300 W) under violent stirring in the air. A certain amount of samples is centrifugal separated and dried at intervals of 5 days to carry out H_2 evolution test. The circle experiment is similar to method of 5 day. The photographs of experimental apparatus and gas chromatography as well as the schematic diagram on the setup and gas flow path are as follows.

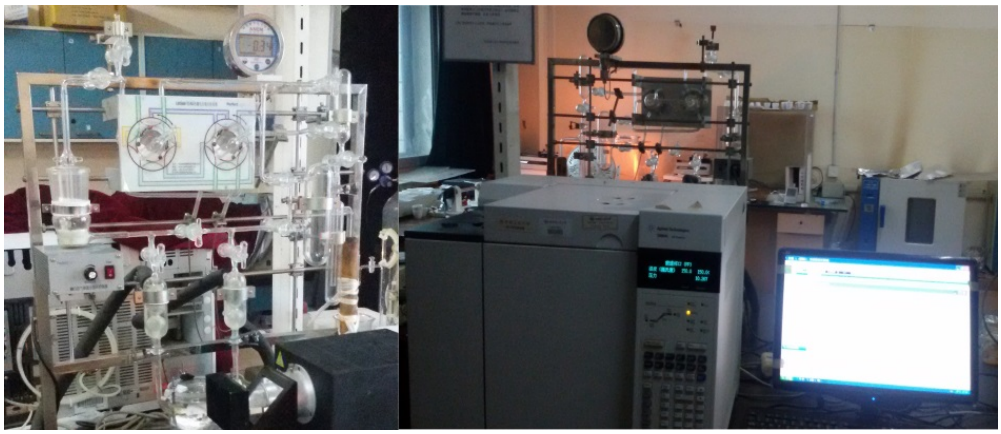

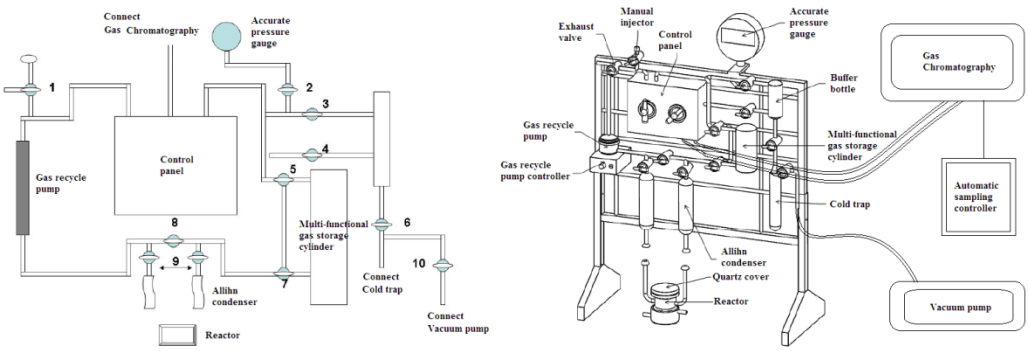

Theory Calculation

The band structure and the density of states (DOS) calculation were performed using the CASTEP code program package.[1-2] The CASTEP calculation includes the plane-wave pseudopotential total energy method based density functional theory (DFT).[3] The GGA (generalized gradient approximation) function of PBE (Perdew, Burke and Ernzerhof)[4] was applied to the exchange correlation potential. The kinetic energy cutoff with 300.0 eV, ultrasoft pseudopotential, convergence tolerance with 5.0×10^{-6} eV/atom, and band energy tolerance with 1.0×10^{-5} eV were adopted in calculation. The Monkhorst-Pack k-points were sampled at 4×4×2.

Light Absorption Property

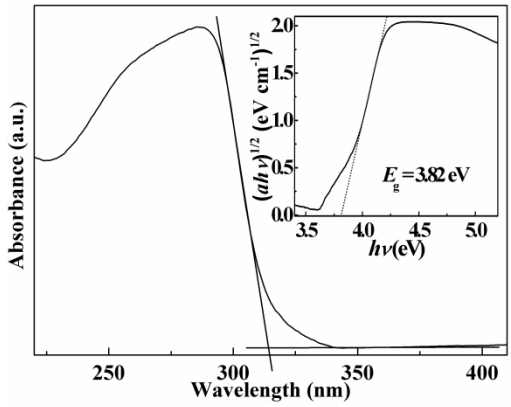

Fig. S1 UV-vis DRS spectrum and plot of $(\alpha h\nu)^{1/2}$ vs $h\nu$ for the $Ag_2Ta_4O_{11}$ sample

Fig. S1 shows the UV-vis DRS spectrum and plot of $(\alpha h\nu)^{1/2}$ vs $h\nu$ for the $Ag_2Ta_4O_{11}$ sample. The $Ag_2Ta_4O_{11}$ sample is an indirect transfer semiconductor based on the calculation results in Fig. 5a. Therefore, according to empirical formula $\alpha h\nu = A(h\nu - E_g)^2$,[5] where α, ν, A and E_g are absorption coefficient, light frequency, proportionality constant and band gap, we estimate that the band gap is 3.82 eV. Meanwhile, the band positions of $Ag_2Ta_4O_{11}$ can be calculated by the following empirical formulae:

$$E_{CB} = X - E_c - 1/2E_g$$

$$E_{VB} = E_{CB} + E_g$$

where X is the absolute electronegativity of the atom semiconductor, expressed as the geometric mean of the absolute electronegativity of the constituent atoms, which is defined as the arithmetic mean of the atomic electron affinity and the first ionization energy; E_c is the energy of free electrons of the hydrogenscale (4.5 eV); E_g is the band gap of the semiconductor; E_{CB} is the conduction band position and E_{VB} is the valence band position. The values of X, E_g, E_{CB}, and E_{VB} of the $Ag_2Ta_4O_{11}$ sample are shown in Table S1.

Table S1 X, E_g, E_{CB}, and E_{VB} of $Ag_2Ta_4O_{11}$ sample

Semiconductor	X(eV)	E_g(eV)	E_{CB}(eV)	E_{VB}(eV)
$Ag_2Ta_4O_{11}$	6.14	3.82	-0.27	3.55

Reference

1. S. J. Clark, M. D. Segall, C. J. Pickard, P. J. Hasnip, M. J. Probert, K. Refson and M. C. Payne, *Z. Krystallogr.*, 2005, **220**, 567-570.
2. J. P. Perdew, K. Burke and M. Ernzerhof, *Phys. Rev. Lett.*, 1996, **77**, 3865-3868.
3. W. Kohn and L. Sham, *J. Phys. Rev. A: At. Mol. Opt. Phys.*, 1965, **140**, 1133-1138.
4. M. D. Segall, P. J. D. Lindan, M. J. Probert, C. J. Pickard, P. J. Hasnip, S. J. Clark and M. C. Payne, *J. Phys. Condens. Matter*, 2002, **14**, 2717-2744.
5. M. A. Butler, *J. Appl. Phys.*, 1977, **48**, 1914-1920.