Electronic Supplementary Material (ESI) for Food & Function.
This journal is © The Royal Society of Chemistry 2020

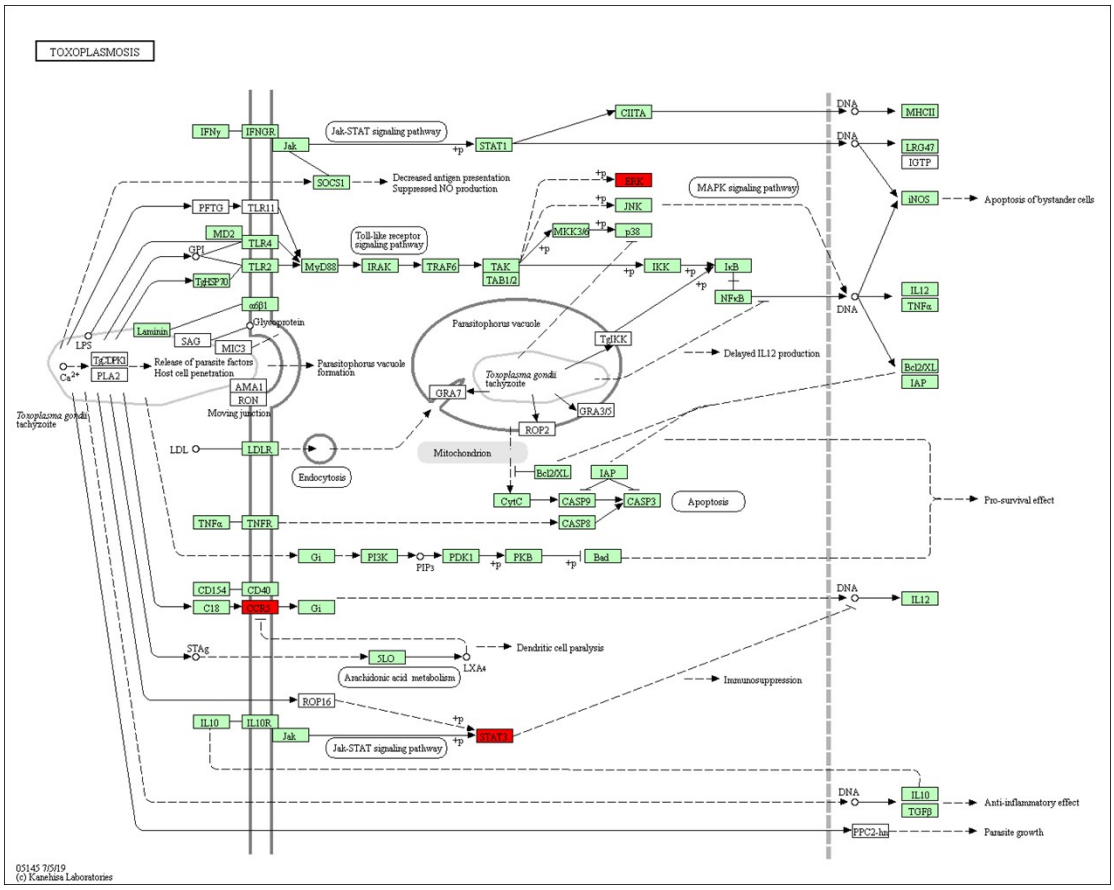

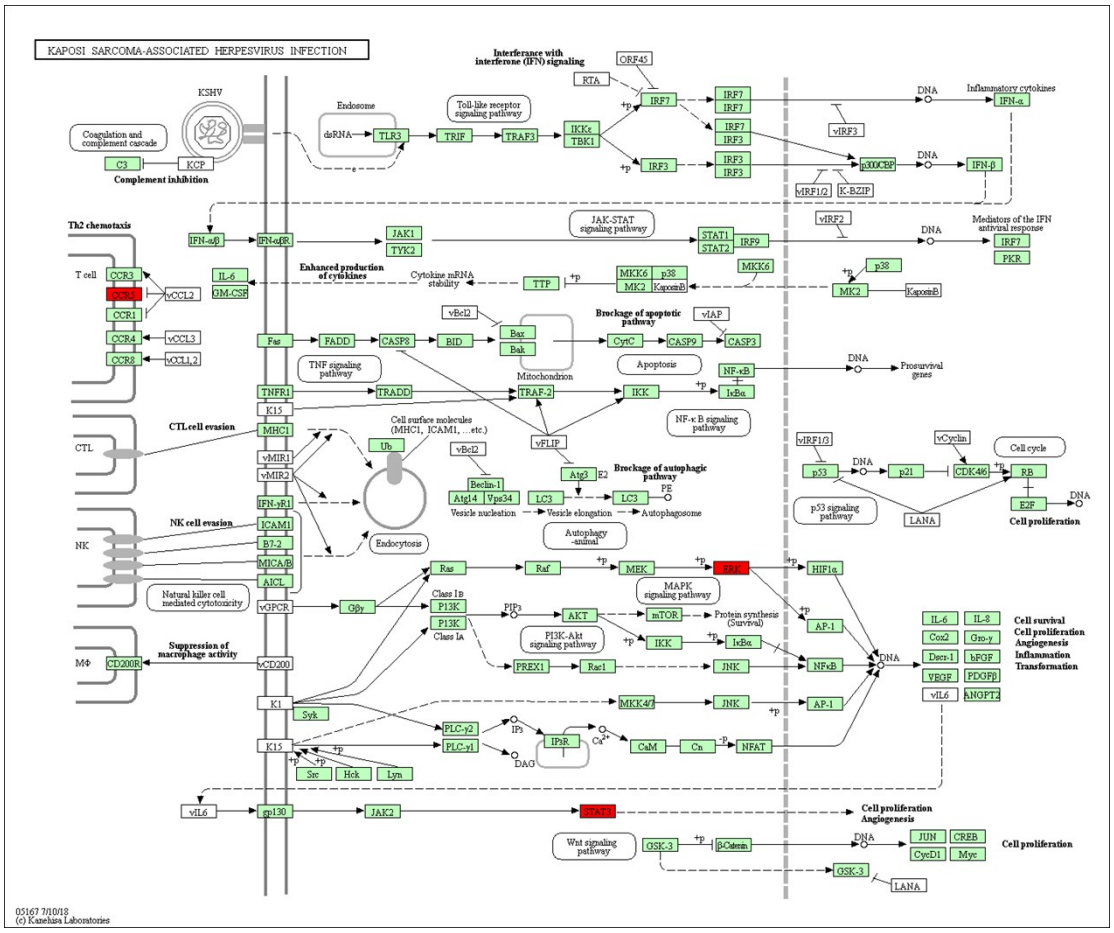

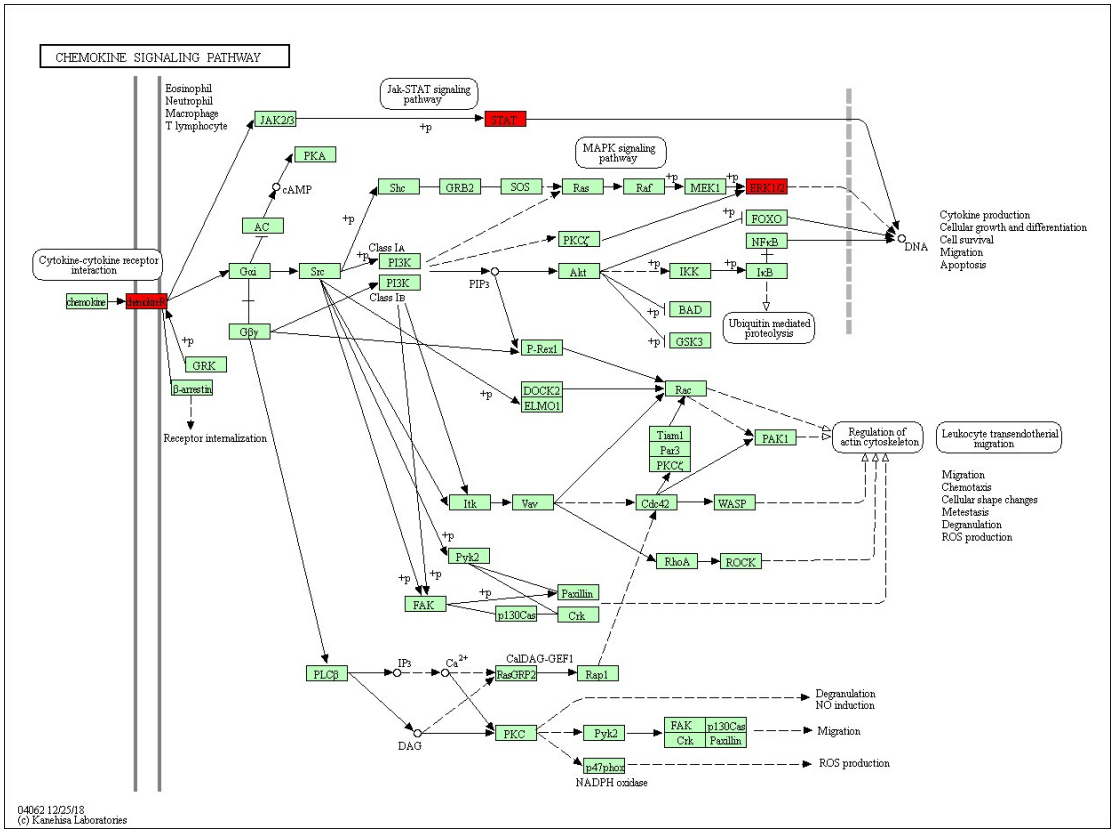
CHEMOKINE SIGNALING PATHWAY
Eosinophil
Neutrophil
Macrophage
T lymphocyte
Jak-STAT signaling pathway
JAK2/3
STAT
+p
PKA
cAMP
AC
MAPK signaling pathway
Shc
GRB2
SOS
Ras
Raf
MEK1
ERK1/2
FOXO
NFκB
PKCζ
Class IA
PI3K
Class IB
PI3K
Gαi
Src
Akt
IKK
IκB
PIP3
BAD
GSK3
Ubiquitin mediated proteolysis
DNA
Cytokine production
Cellular growth and differentiation
Cell survival
Migration
Apoptosis
Cytokine-cytokine receptor interaction
chemokine
chemokine
Gβγ
GRK
β-arrestin
Receptor internalization
P-Rex1
DOCK2
ELMO1
Rac
Tiam1
Par3
PKCζ
PAK1
Rho
Regulation of actin cytoskeleton
Leukocyte transendothelial migration
Migration
Chemotaxis
Cellular shape changes
Metestasis
Degranulation
ROS production
Itk
Vav
Cdc42
WASP
Pyk2
RhoA
ROCK
FAK
Paxillin
p130Cas
Crk
PLCβ
IP3
Ca2+
CalDAG-GEF1
RasGRP2
Rap1
DAG
PKC
Pyk2
FAK
Crk
p130Cas
Paxillin
Degranulation
NO induction
Migration
p47phox
NADPH oxidase
ROS production
04062 12/25/18
(c) Kanehisa Laboratories

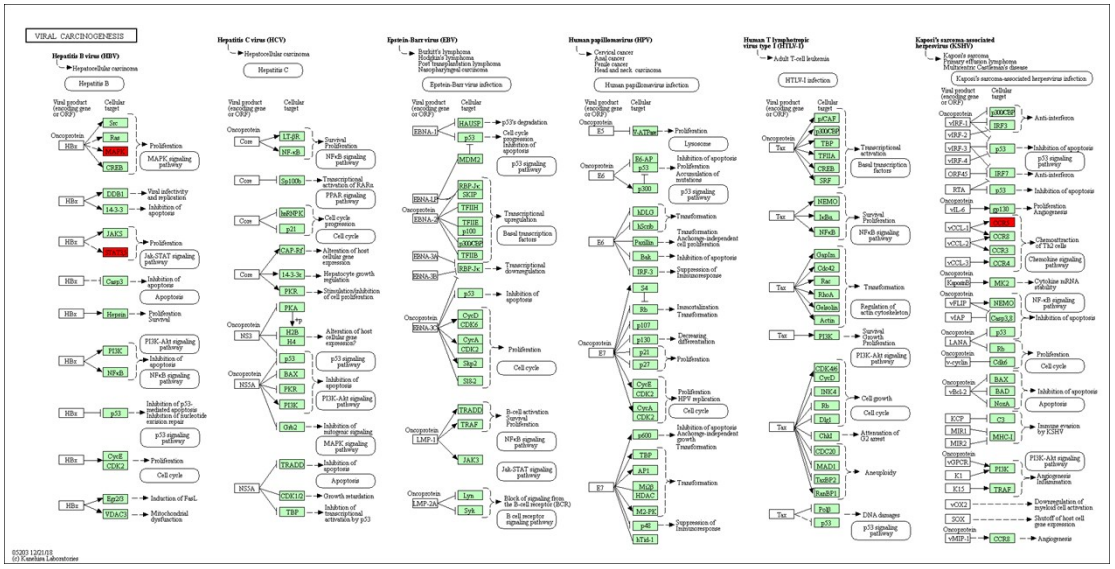
VIRAL CARCINOGENESIS
Hepatitis B virus (HBV)
Hepatitis C virus (HCV)
Epstein-Barr virus (EBV)
Human papillomavirus (HPV)
Human T lymphotropic virus type 1 (HTLV-I)
Kaposi's sarcoma-associated herpesvirus (KSHV)

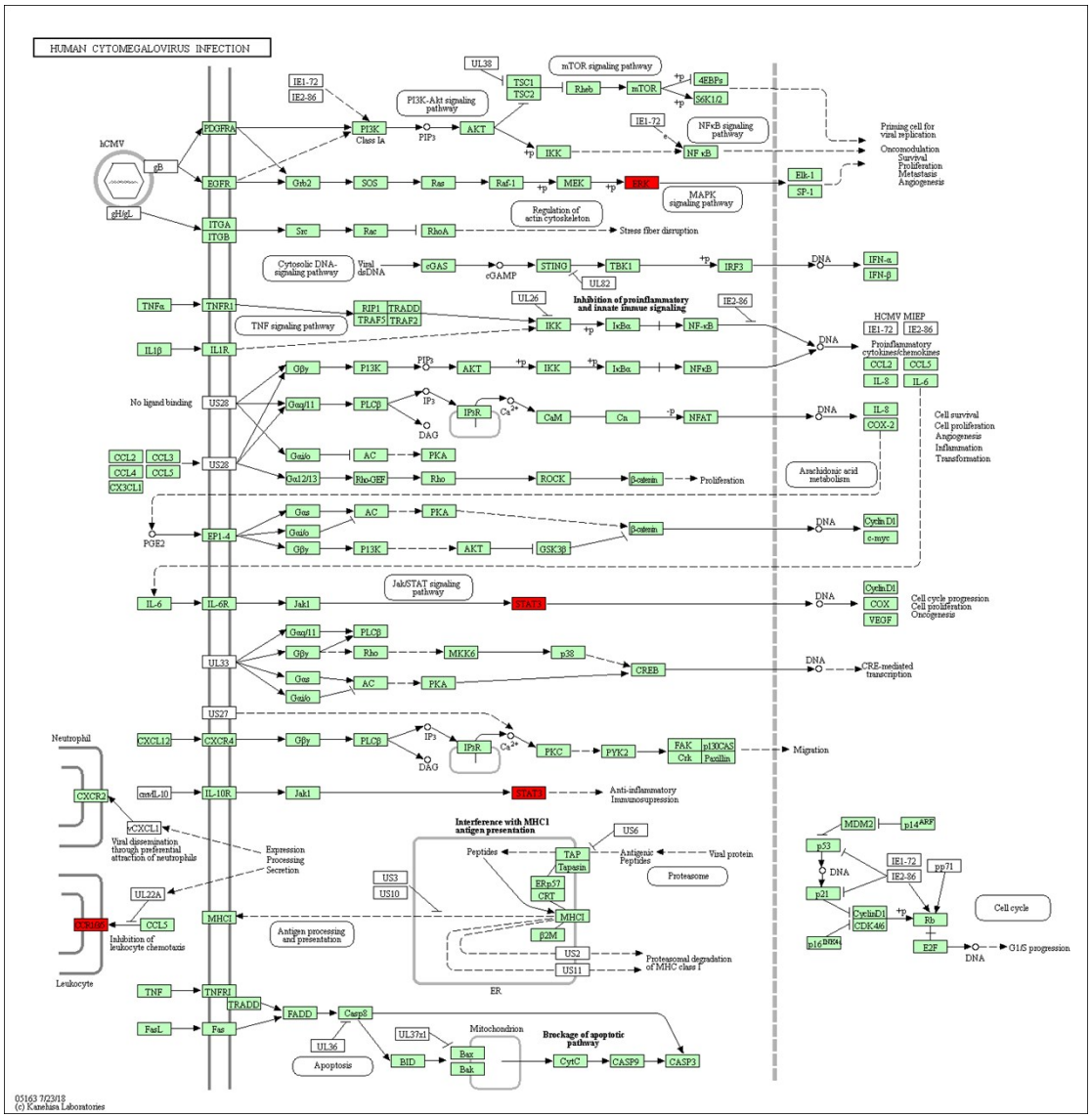

05163 7/23/18
(c) Kanehisa Laboratories

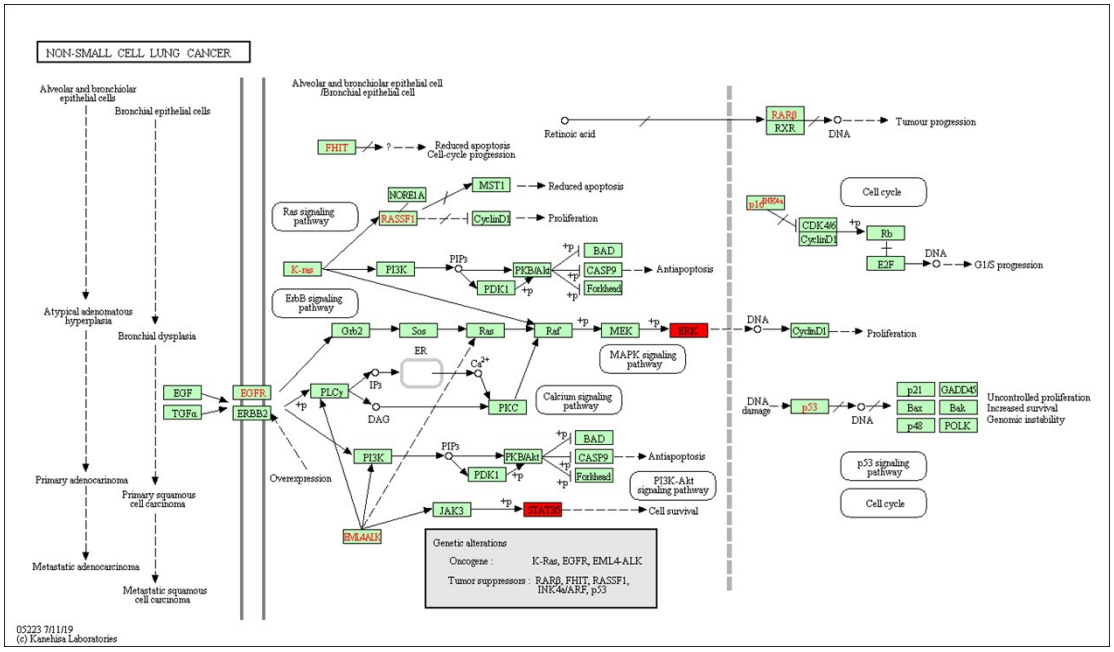

05223 7/11/19
(c) Kanehisa Laboratories

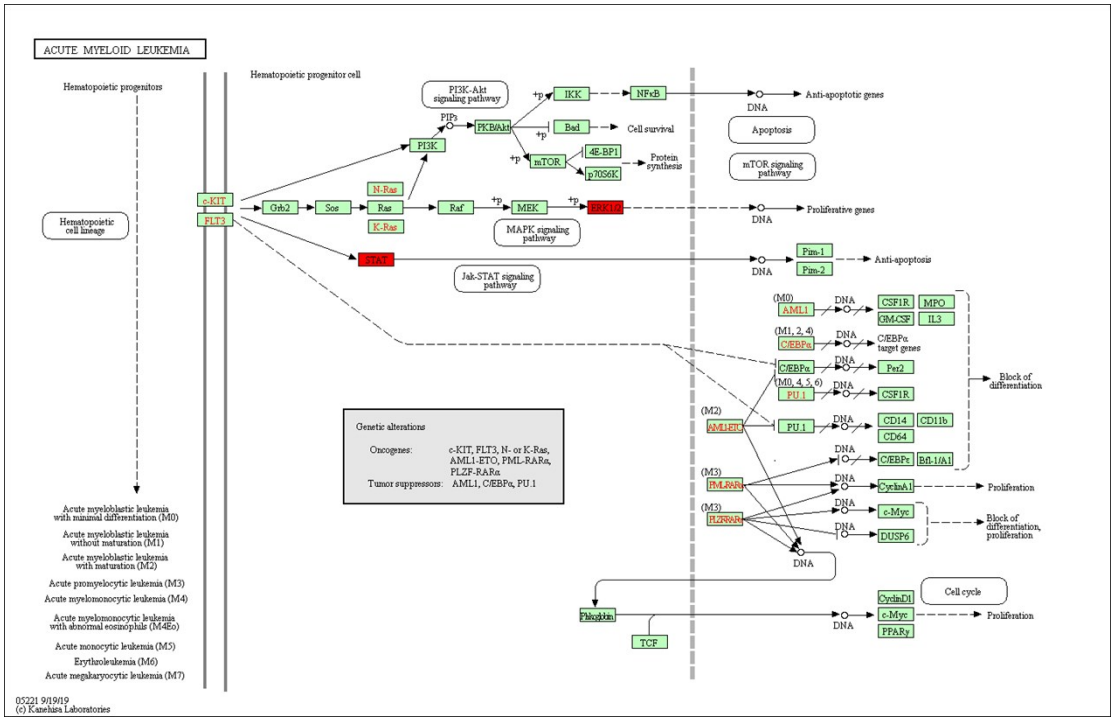
ACUTE MYELOID LEUKEMIA
Hematopoietic progenitors
Hematopoietic progenitor cell
Hematopoietic cell lineage
c-KIT
FLT3
Grb2
Sos
Ras
N-Ras
K-Ras
Raf
MEK
ERK1/2
MAPK signaling pathway
PI3K-Akt signaling pathway
PI3K
PIP3
PKB/Akt
IKK
NFκB
Bad
Cell survival
mTOR
4E-BP1
p70S6K
Protein synthesis
Apoptosis
mTOR signaling pathway
Anti-apoptotic genes
Proliferative genes
STAT
Jak-STAT signaling pathway
Pim-1
Pim-2
Anti-apoptosis
(M0)
AML1
CSF1R
MPO
GM-CSF
IL3
(M1, 2, 4)
C/EBPα
C/EBPα target genes
Per2
(M0, 4, 5, 6)
PU.1
(M2)
AML1-ETO
CD14
CD11b
CD64
C/EBPε
Bfl-1/A1
Block of differentiation
(M3)
PML-RARα
CyclinA1
Proliferation
PLZF-RARα
c-Myc
DUSP6
Block of differentiation, proliferation
Genetic alterations
Oncogenes: c-KIT, FLT3, N- or K-Ras, AML1-ETO, PML-RARα, PLZF-RARα
Tumor suppressors: AML1, C/EBPα, PU.1
Acute myeloblastic leukemia with minimal differentiation (M0)
Acute myeloblastic leukemia without maturation (M1)
Acute myeloblastic leukemia with maturation (M2)
Acute promyelocytic leukemia (M3)
Acute myelomonocytic leukemia (M4)
Acute myelomonocytic leukemia with abnormal eosinophils (M4Eo)
Acute monocytic leukemia (M5)
Erythroleukemia (M6)
Acute megakaryocytic leukemia (M7)
Phlogistin
TCF
CyclinD1
c-Myc
PPARγ
Cell cycle
05221 9/19/19
(c) Kanehisa Laboratories

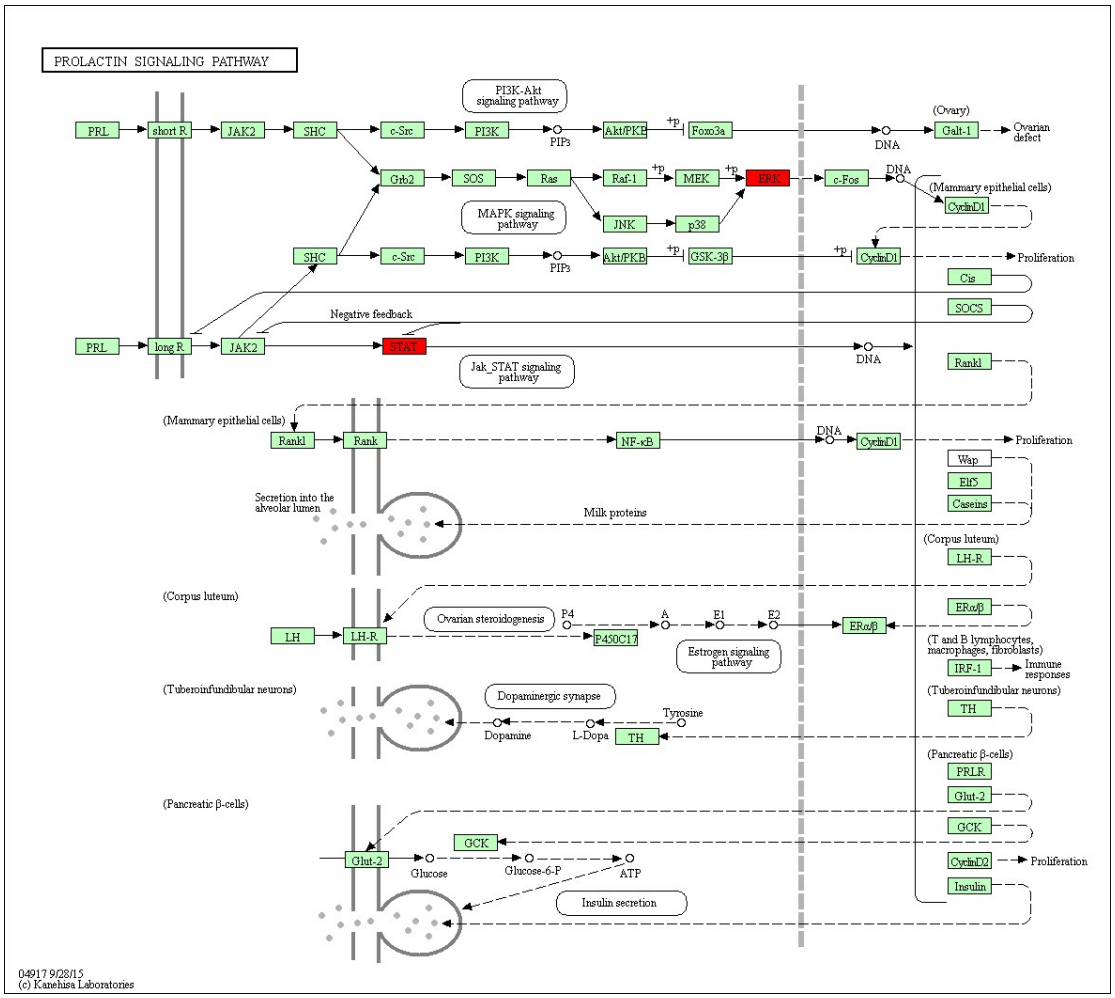
PROLACTIN SIGNALING PATHWAY
PRL
short R
long R
JAK2
SHC
c-Src
PI3K
PIP3
Akt/PKB
Foxo3a
(Ovary)
Galt-1
Ovarian defect
Grb2
SOS
Ras
Raf-1
MEK
ERK
MAPK signaling pathway
JNK
p38
c-Fos
(Mammary epithelial cells)
CyclinD1
GSK-3β
Proliferation
Cis
SOCS
Negative feedback
STAT1
Jak_STAT signaling pathway
Rankl
Rank
NF-κB
Wap
Elf5
Caseins
Secretion into the alveolar lumen
Milk proteins
(Corpus luteum)
LH-R
LH
Ovarian steroidogenesis
P4
A
E1
E2
P450C17
Estrogen signaling pathway
ERαβ
(T and B lymphocytes, macrophages, fibroblasts)
IRF-1
Immune responses
(Tuberoinfundibular neurons)
Dopaminergic synapse
Tyrosine
Dopamine
L-Dopa
TH
(Pancreatic β-cells)
PRLR
Glut-2
GCK
Glucose
Glucose-6-P
ATP
Insulin secretion
Insulin
04917 9/28/15
(c) Kanehisa Laboratories

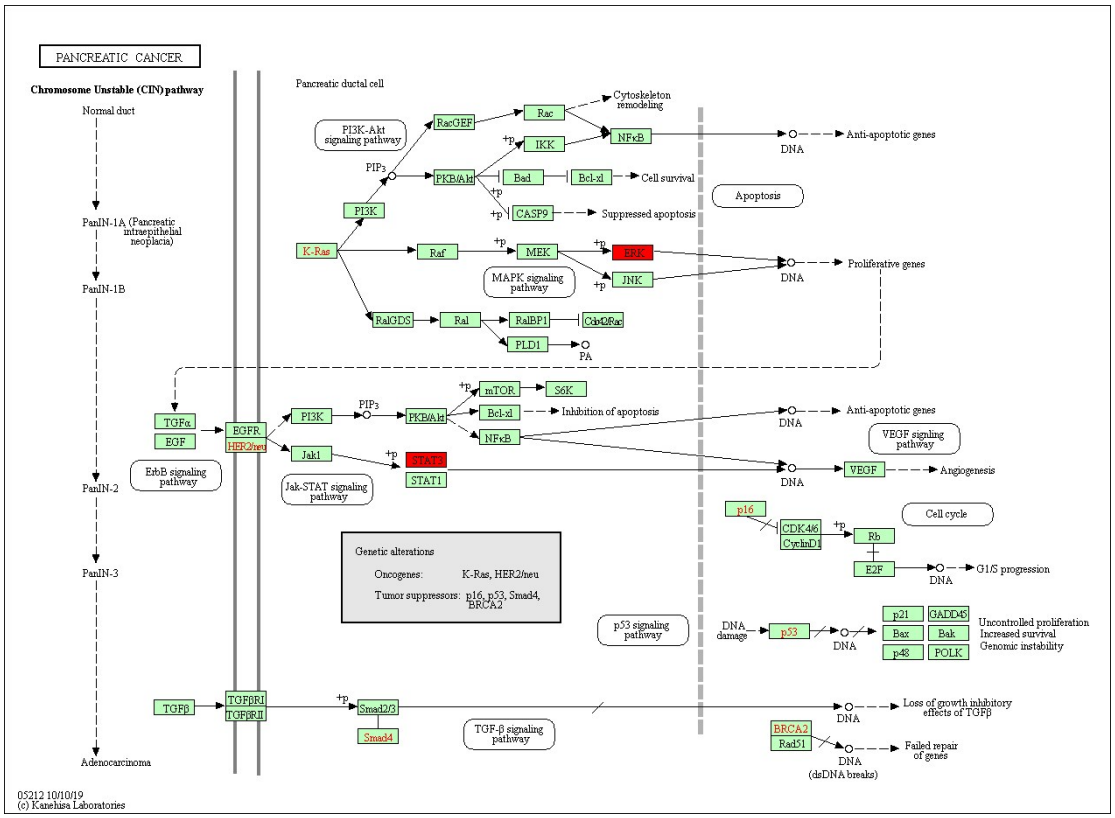

05212 10/10/19
(c) Kanehisa Laboratories

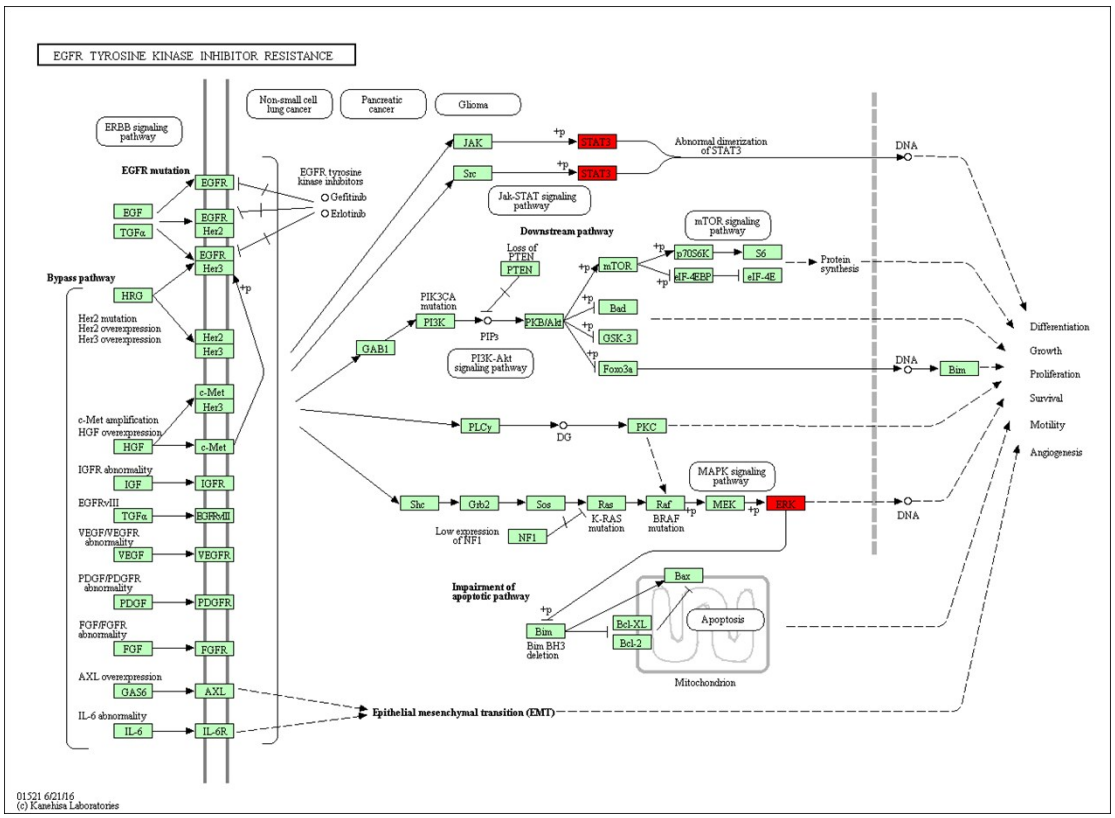

01521 6/21/16
(c) Kanehisa Laboratories