This journal is © The Royal Society of Chemistry 2013

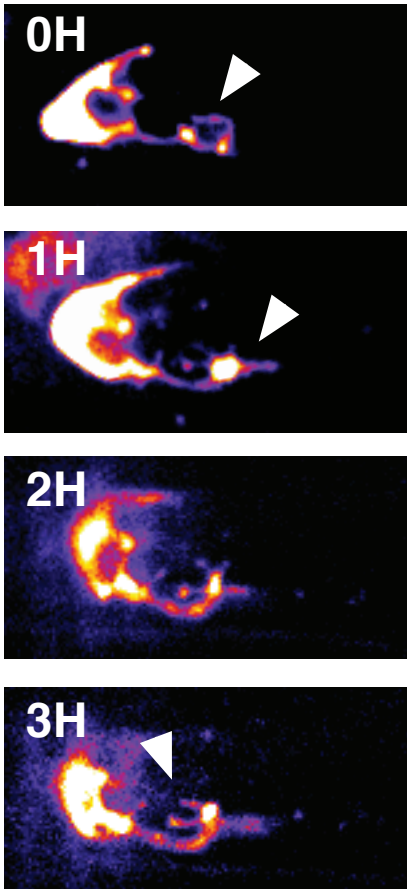

Figure S1. Further example of a transient ring (arrowhead at 0H) giving rise to nascent extensions (arrowhead at 1H) resulting in growth of processes in a distal direction (arrowhead at 3H).

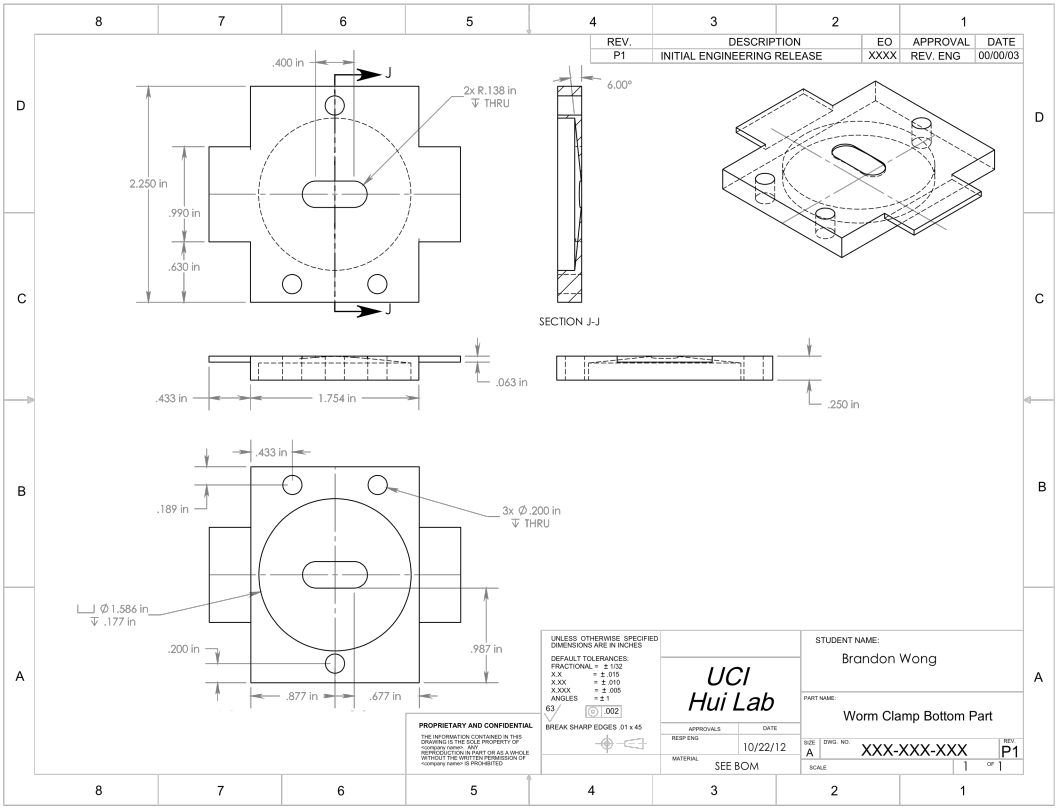

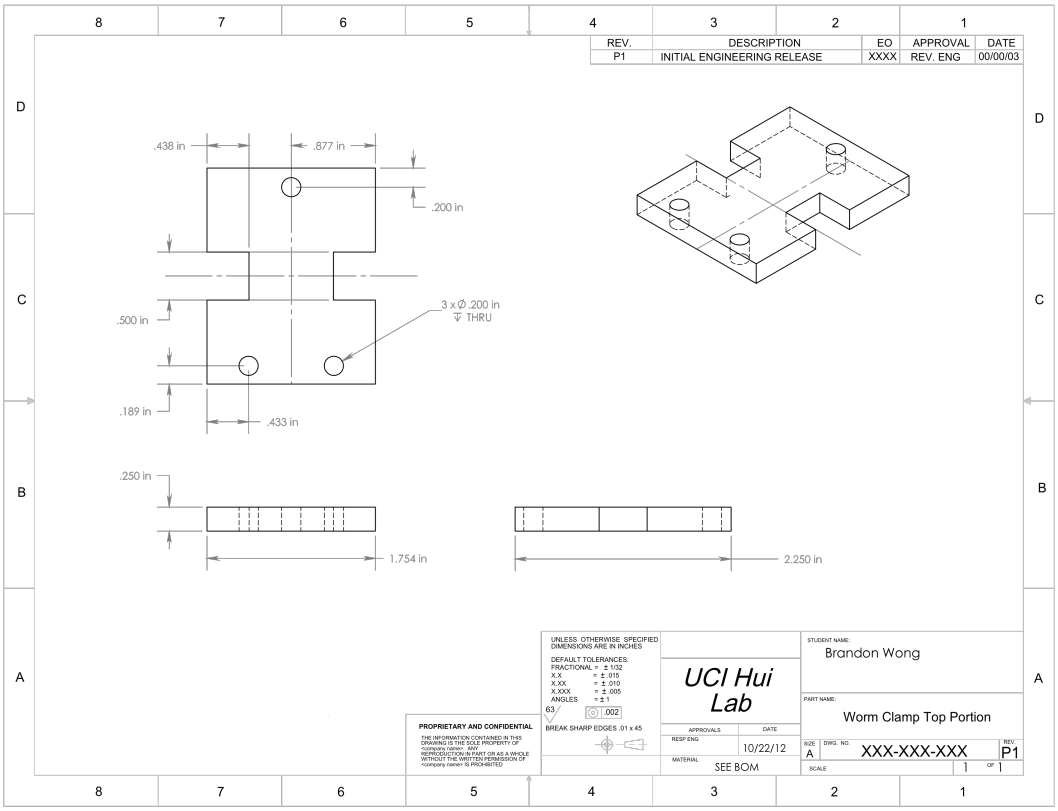

Figure S2. Engineering drawings of the clamping rig. These parts may be conventionally machined in acrylic plastic.