This journal is © The Royal Society of Chemistry 2009

Droplet on demand system utilizing a computer controlled microvalve integrated into a stiff polymeric microfluidic device.

Krzysztof Churski[a], Jacek Michalski[a] and Piotr Garstecki[a,*]

SUPPLEMENTARY INFORMATION

Operation of the electromagnetic valves

The electromagnetic valves (EMV) that we used reacted with a delay to the change in the voltage that controlled them. Switching of the controlling voltage from 0 V to 24 V resulted in opening of the EMV after a delay of 4 ms. Conversely, switching of the voltage from 24 V to 0 V resulted in closing of the valve after a delay of 24 ms. These characteristics of the EMV forced us to use a modified protocol of changing the controlling voltage, and limited the maximum frequency of switching the EMV (and hence the microvalve) closed-open-closed.

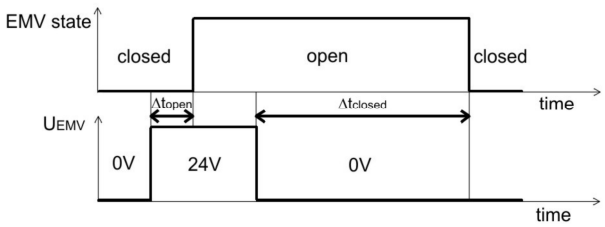

Supplementary Fig. 1 The details of the operation of a single electromagnetic valve (V165, Sirai, Italy). The electromagnetic valves that we used displayed lags in opening (Δt_{open} = 4 ms) and in closing (Δt_{close} = 24 ms) between the change of the controlling voltage and the physical change of the state of the valve.

The delays in opening and closing of the EMV had to be taken into account in designing the protocols for controlling the microvalve: as we intended to close the EMV_{HIGH} and open EMV_{LOW} simultaneously (to open the microvalve), and to open the EMV_{HIGH} and close EMV_{LOW} simultaneously (to close the microvalve) we had to apply the controlling voltages with in appropriate advance. This is illustrated in Supplementary Figure 2.

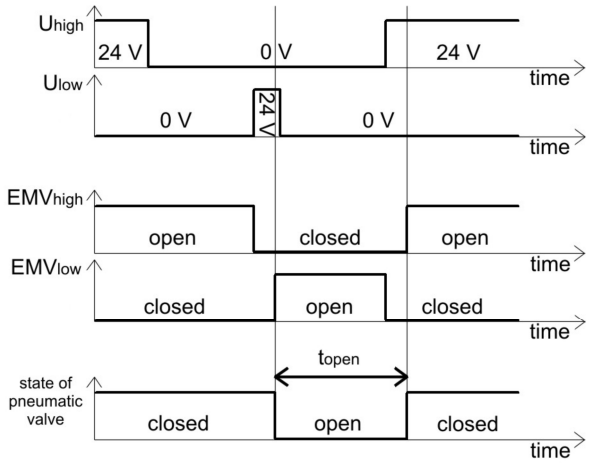

Supplementary Fig. 2 A diagram depicting the relation between the protocols for changes of the voltage that controlled the EMVs and the states of the valves (and the microvalve).

Dependence of the volume of the droplets on frequency of their formation for various values of p_{LOW}.

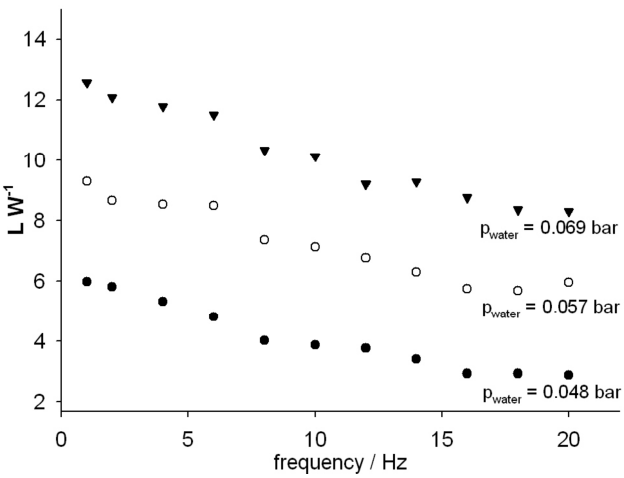

Supplementary Fig. 3 Dependence of the lengths of the droplets on frequency for different water pressure. We observed decrease of droplets size with increasing frequency. The pressures applied to the membrane was p_{HIGH} = 1 bar, p_{LOW} = 0 bar. Flow rate of continuous phase was 3 ml h^{-1}, t_{open} = 24 ms. Droplets were formed in flow-focusing system.

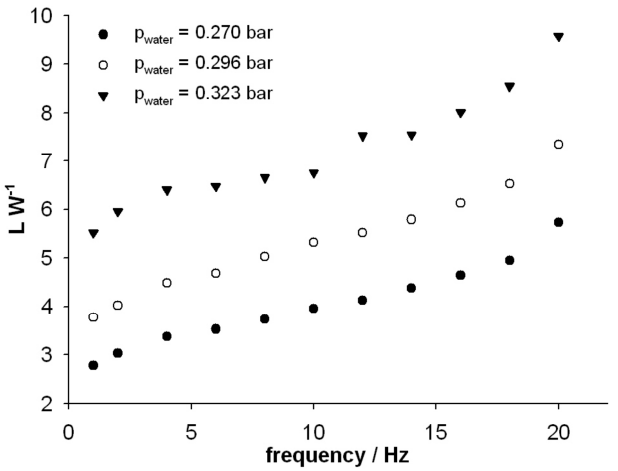

Supplementary Fig. 4 Dependence of the lengths of the droplets on frequency for different water pressure. We observed increase of droplets size with increasing frequency. The pressures applied to the membrane was p_{HIGH} = 1 bar, p_{LOW} = atmospheric pressure. Flow rate of continuous phase was 3 ml h^{-1}, t_{open} = 24 ms. Droplets were generated in flow-focusing system.

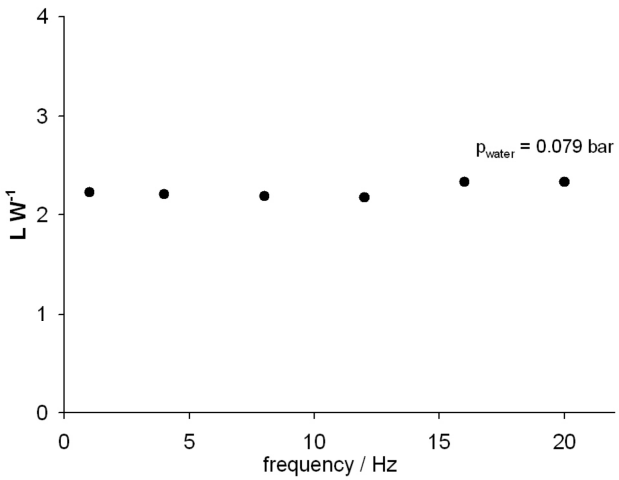

Supplementary Fig. 5 Dependence of the lengths of the droplets on frequency for water pressure = 0.079 bar. The pressures applied to the membrane was p_{HIGH} = 0.3 bar, p_{LOW} = - 0.15 bar. We noted constant droplet size (standard deviation = 6.9 %) with increasing frequency. Flow rate of continuous phase was 1.5 ml h^{-1}, t_{open} = 24 ms.

Videos illustrating the operation of the droplet on demand systems.

- Three videos:
  - **DOD_T_topen_30ms.avi**
  - **DOD_T_topen_32ms.avi**
  - **DOD_T_topen_34ms.avi**

  illustrate formation of droplets on demand in a T-junction system for three different values of the interval during which the microvalve is open (topen = 30, 32, 34 ms). The parameters of the experiment were set to: p_{HIGH} = 0.2 bar, p_{LOW} = 0 bar, p_{water} = 0,09 bar, Q = 1 ml/h, f = 1 Hz. The videos were captures at a frame rate of 500 fps and are played back at 30 fps.
- Video **Double_T_junction.avi**: recorded at 250 fps, playback rate 12 fps. Parameters of the experiment: t_{open_white} = 30 ms, t_{open_black1} = 40 ms, t_{open_black2} = 30 ms, t_{close_white} = 1470 ms, t_{close_black1} = 460 ms, t_{close_black2} = 970 ms, Q = 0,2 ml/h, p_{white} = 0,2 bar, p_{black} = 0,181 bar, p_{HIGH} = 1 bar, p_{LOW} = 0 bar
- Videos of the system powered by negative pressure applied to the outlet. The experimental parameters are given in Figure 10 in the manuscript. In the list below, in rectangular brackets we list the record / playback frame rates [in fps] for these videos:
  - **FF_Vacuum_A.avi**: [250/30]
  - **FF_Vacuum_B.avi**: [250/5]
  - **FF_Vacuum_C.avi**: [250/5]
  - **FF_Vacuum_D.avi**: [250/10]