Electronic Supplementary Material (ESI) for Molecular BioSystems.
This journal is © The Royal Society of Chemistry 2014

Supplementary file 1

Figure captions

Figure S1 Schematic representation of elementary modes (EMs) involved in Group 1 (acidogenesis), Group 2 (solventogenesis) and Group 3 (acidogenesis and solventogenesis) in metabolic network of *C. acetobutylicum*. Arrows in red show activated reactions in respective elementary mode. Dotted black arrows show inactive reactions. Dotted box indicates cell membrane. " $\leftrightarrow$ "and " $\longrightarrow$ " denotes reversible and irreversible reactions. For abbreviation and net reaction representation of elementary modes can be seen in Table S1 and Table S2 respectively.

Figure S2 Feasible solution spaces for ethanol synthesis with respect to acetic acid and butyric acid consumption in *C. acetobutylicum*. Consumption rate of glucose was fixed (100 mM h^{-1}), and consumption rate of acetic acid and butyric acid were varied within the determined feasible range of 0-400 mM h^{-1} and 0-100 nM h^{-1} respectively. Ethanol was considered as objective function to find its optimized solution spaces.

Figure S3 Feasible solution spaces for hydrogen synthesis with respect to acetic acid and butyric acid consumption in *C. acetobutylicum*. Consumption rate of glucose was fixed (100 mM h^{-1}), and consumption rate of acetic acid and butyric acid were varied within the determined feasible range of 0-400 mM h^{-1} and 0-100 nM h^{-1} respectively. Hydrogen was considered as objective function to find its optimized solution spaces.

Figure S4 Flux variability analysis. Figure shows flux variation range (maximum - minimum) of all 67 EMs because of alternate solution spaces. Maximum and minimum values of all fluxes were calculated using methodology described in Mahadevan and Schilling (2003) for all growth conditions. Description of all growth conditions can be seen in Results and Discussion section of paper.

Table captions

Table S1 Metabolite abbreviation

Table S2 Biochemical reactions involved in metabolic network of *C. acetobutylicum*

Table S3 Net reaction representation of all elementary modes. Path length denotes number of enzymes/reactions involved in elementary mode. Elementary modes of Group 3 have been sub-categorized with respect to substrate(s).

Table S4 Distribution of elementary modes in acidogenesis (Group 1) on the basis of products. Glucose was the only substrate for the production of five products (biomass, acetic acid, butyric acid, hydrogen and carbon dioxide) in this phase.

Table S5 Distribution of elementary modes in solventogenesis (Group 2) (A) on the basis of substrates (B) on the basis of products. Three substrates (Glucose, acetic acid, and butyric acid) were available for the production of four main products (acetone, butanol, ethanol, and hydrogen).

Table S6 Distribution elementary modes, which are involved in acidogenesis and solventogenesis simultaneously (Group 3). EMs under this category includes total three substrates (glucose, acetic acid, and butyric acid) and main six products (biomass, acetic acid, butyric acid, acetone, butanol, and ethanol).

Table S7 Accumulation rates (mM h^{-1}) of external metabolites during acidogenesis and solventogenesis in *C. acetobutylicum*'s metabolic network under unstressed and unstressed conditions.

Figure S1

EMs involved in acidogenesis (Group 1)

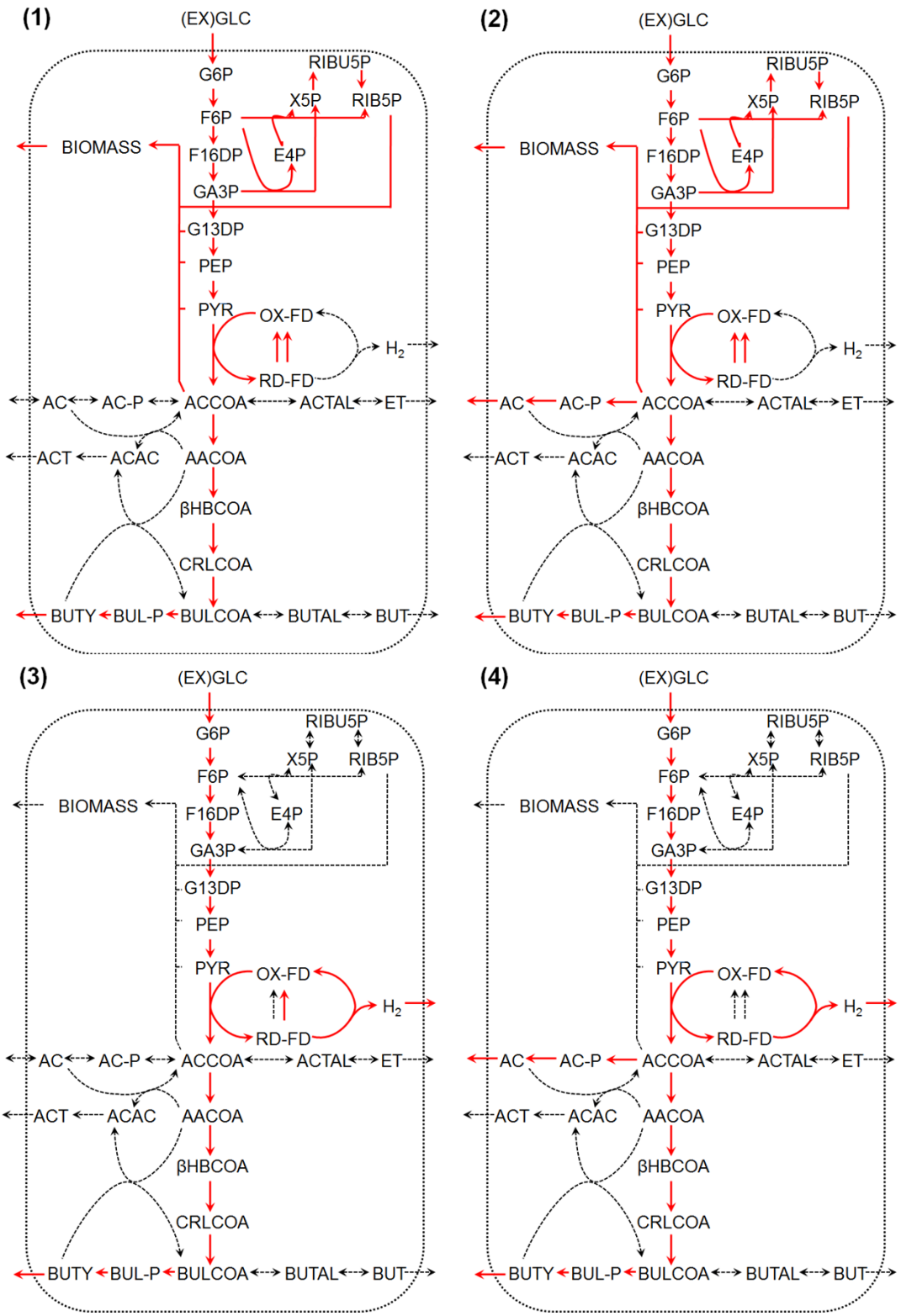

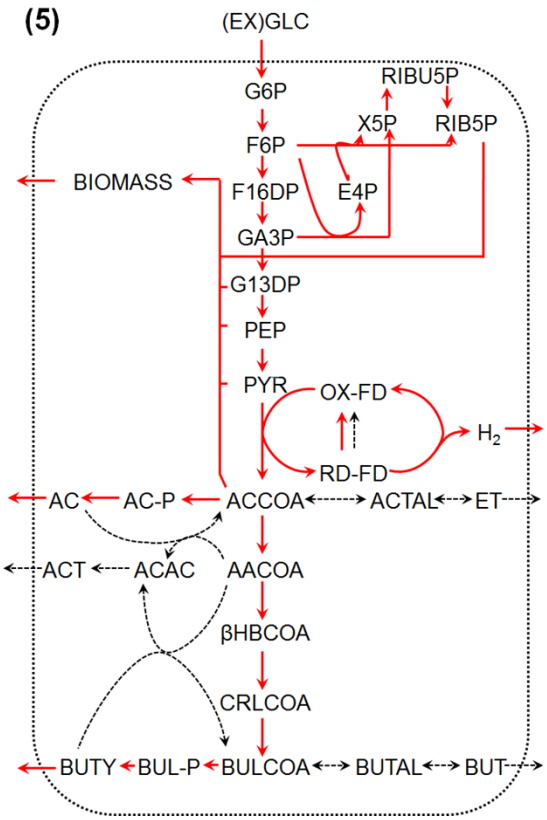
(5)
(EX)GLC
G6P
RIBU5P
X5P
RIB5P
F6P
BIOMASS
F16DP
E4P
GA3P
G13DP
PEP
PYR
OX-FD
H2
RD-FD
AC
AC-P
ACCOA
ACTAL
ET
ACT
ACAC
AACOA
βHBCOA
CRLCOA
BUTY
BUL-P
BULCOA
BUTAL
BUT

EMs involved in solventogenesis (Group 2)

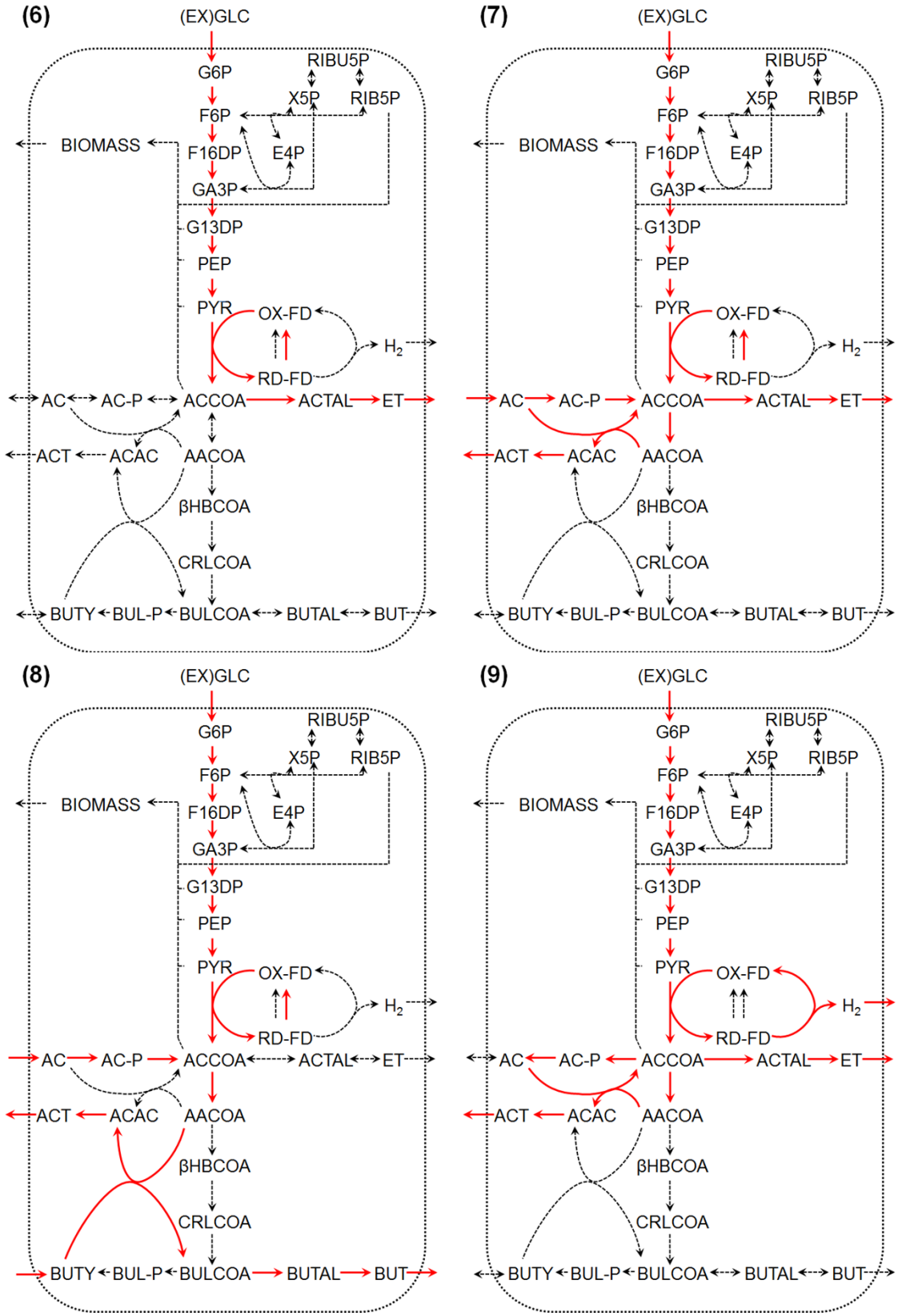

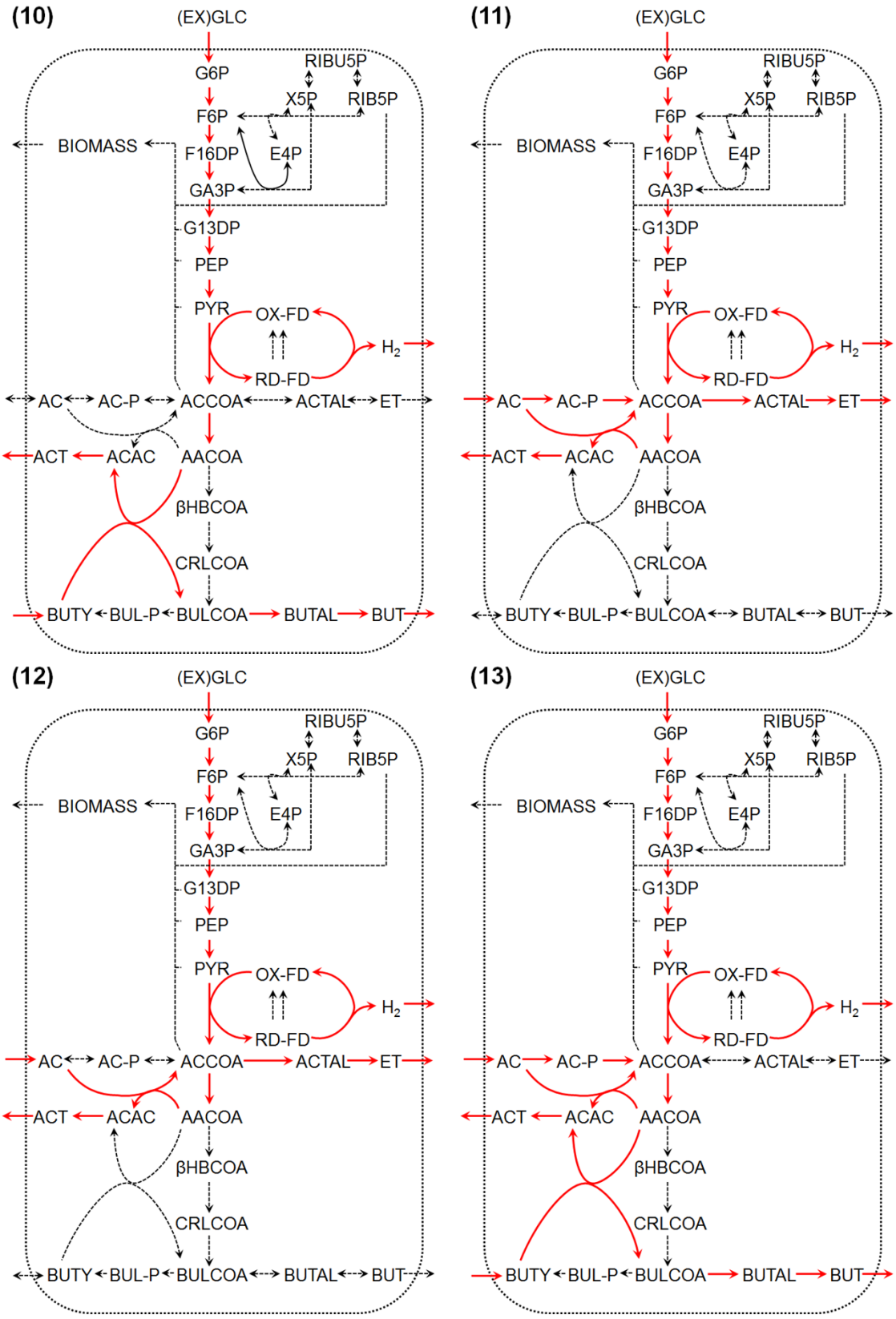
(10)
(EX)GLC
G6P
RIBU5P
X5P
RIB5P
F6P
BIOMASS
F16DP
E4P
GA3P
G13DP
PEP
PYR
OX-FD
H2
RD-FD
AC
AC-P
ACCOA
ACTAL
ET
ACT
ACAC
AACOA
βHBCOA
CRLCOA
BUTY
BUL-P
BULCOA
BUTAL
BUT
(11)
(EX)GLC
G6P
RIBU5P
X5P
RIB5P
F6P
BIOMASS
F16DP
E4P
GA3P
G13DP
PEP
PYR
OX-FD
H2
RD-FD
AC
AC-P
ACCOA
ACTAL
ET
ACT
ACAC
AACOA
βHBCOA
CRLCOA
BUTY
BUL-P
BULCOA
BUTAL
BUT
(12)
(EX)GLC
G6P
RIBU5P
X5P
RIB5P
F6P
BIOMASS
F16DP
E4P
GA3P
G13DP
PEP
PYR
OX-FD
H2
RD-FD
AC
AC-P
ACCOA
ACTAL
ET
ACT
ACAC
AACOA
βHBCOA
CRLCOA
BUTY
BUL-P
BULCOA
BUTAL
BUT
(13)
(EX)GLC
G6P
RIBU5P
X5P
RIB5P
F6P
BIOMASS
F16DP
E4P
GA3P
G13DP
PEP
PYR
OX-FD
H2
RD-FD
AC
AC-P
ACCOA
ACTAL
ET
ACT
ACAC
AACOA
βHBCOA
CRLCOA
BUTY
BUL-P
BULCOA
BUTAL
BUT

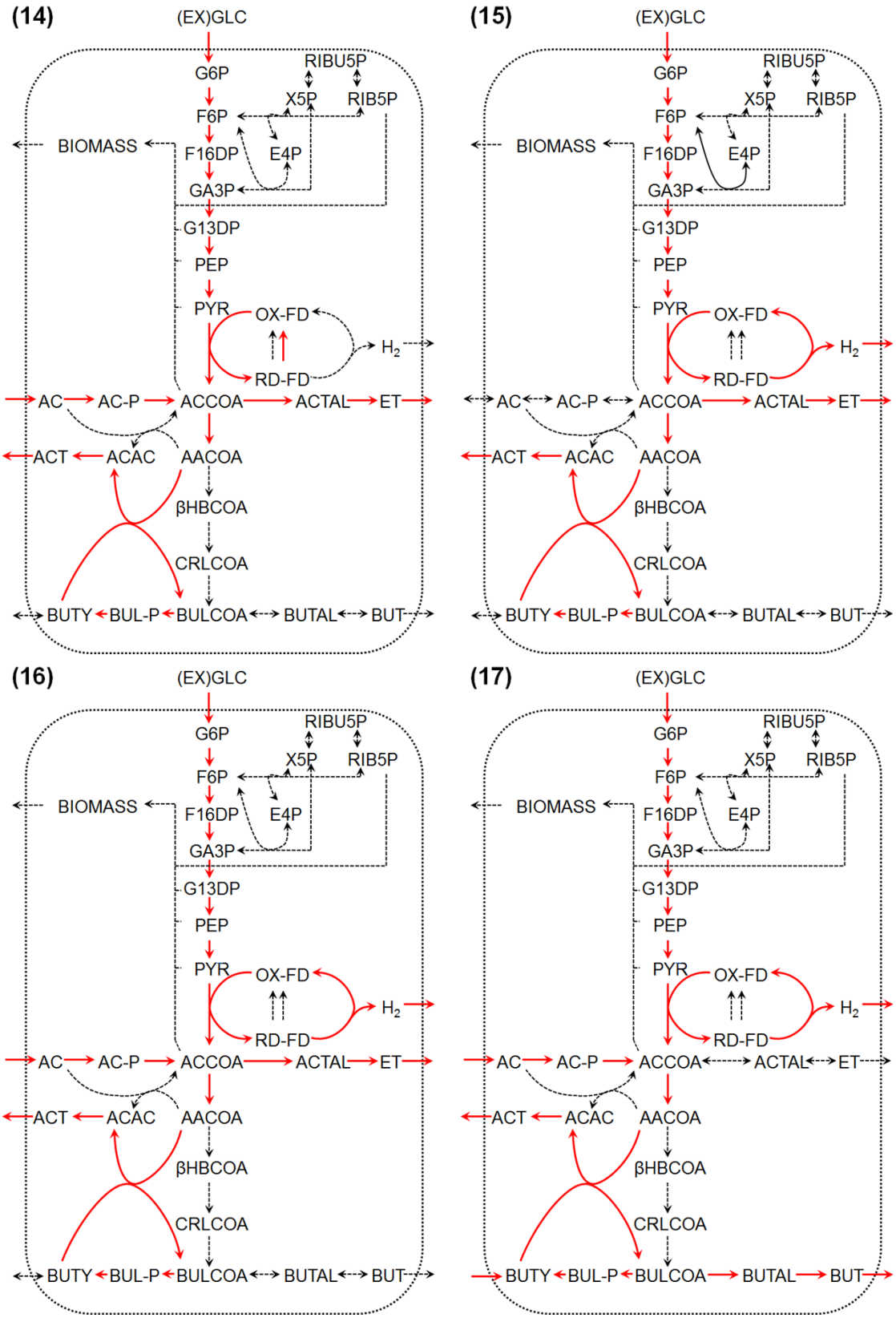
(14)
(EX)GLC
G6P
RIBU5P
X5P
RIB5P
F6P
BIOMASS
F16DP
E4P
GA3P
G13DP
PEP
PYR
OX-FD
H2
RD-FD
AC
AC-P
ACCOA
ACTAL
ET
ACT
ACAC
AACOA
βHBCOA
CRLCOA
BUTY
BUL-P
BULCOA
BUTAL
BUT
(15)
(EX)GLC
G6P
RIBU5P
X5P
RIB5P
F6P
BIOMASS
F16DP
E4P
GA3P
G13DP
PEP
PYR
OX-FD
H2
RD-FD
AC
AC-P
ACCOA
ACTAL
ET
ACT
ACAC
AACOA
βHBCOA
CRLCOA
BUTY
BUL-P
BULCOA
BUTAL
BUT
(16)
(EX)GLC
G6P
RIBU5P
X5P
RIB5P
F6P
BIOMASS
F16DP
E4P
GA3P
G13DP
PEP
PYR
OX-FD
H2
RD-FD
AC
AC-P
ACCOA
ACTAL
ET
ACT
ACAC
AACOA
βHBCOA
CRLCOA
BUTY
BUL-P
BULCOA
BUTAL
BUT
(17)
(EX)GLC
G6P
RIBU5P
X5P
RIB5P
F6P
BIOMASS
F16DP
E4P
GA3P
G13DP
PEP
PYR
OX-FD
H2
RD-FD
AC
AC-P
ACCOA
ACTAL
ET
ACT
ACAC
AACOA
βHBCOA
CRLCOA
BUTY
BUL-P
BULCOA
BUTAL
BUT

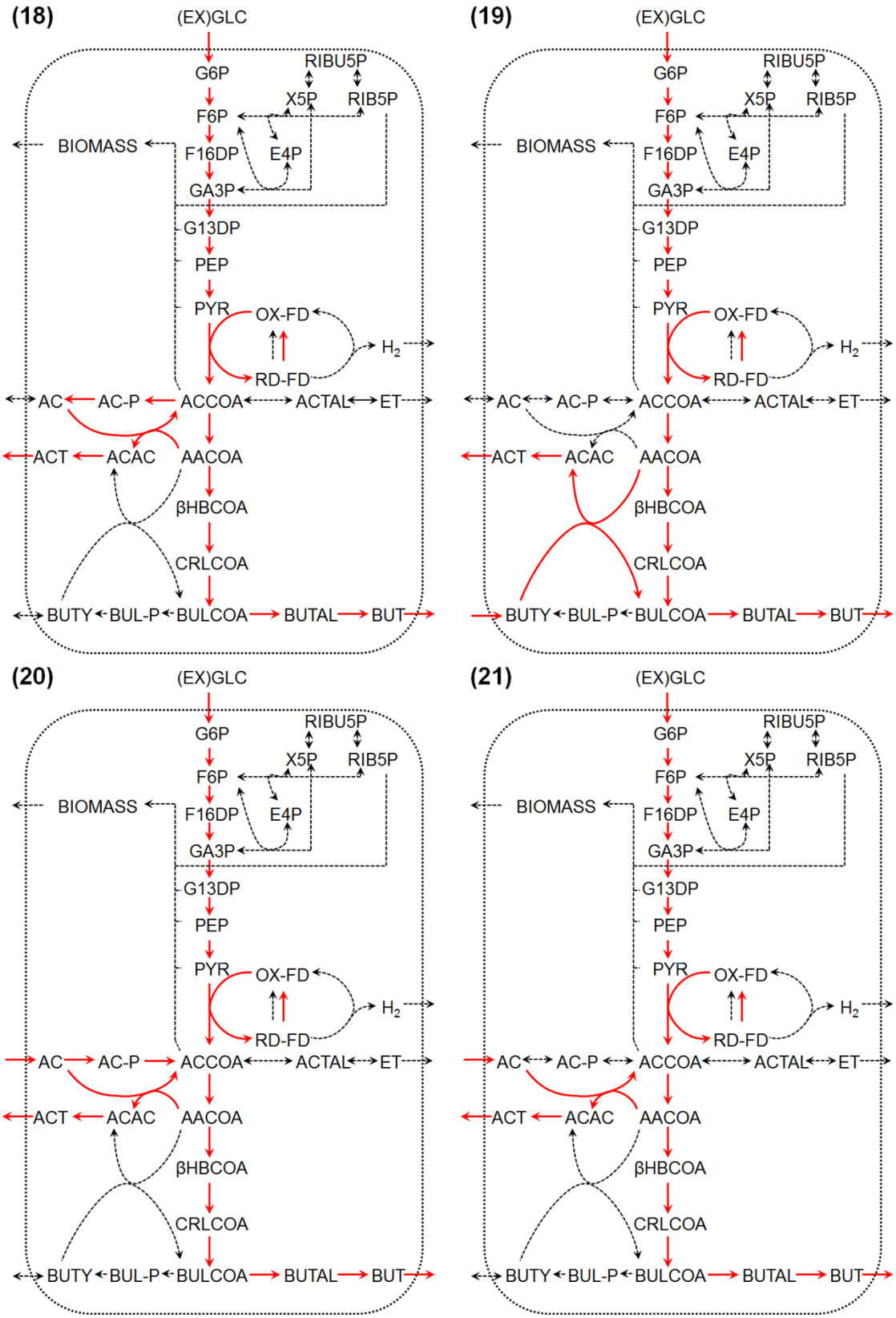
(18)
(19)
(20)
(21)
(EX)GLC
G6P
F6P
F16DP
GA3P
G13DP
PEP
PYR
RIBU5P
X5P
RIB5P
E4P
BIOMASS
OX-FD
RD-FD
H2
AC
AC-P
ACCOA
ACTAL
ET
ACT
ACAC
AACOA
βHBCOA
CRLCOA
BUTY
BUL-P
BULCOA
BUTAL
BUT

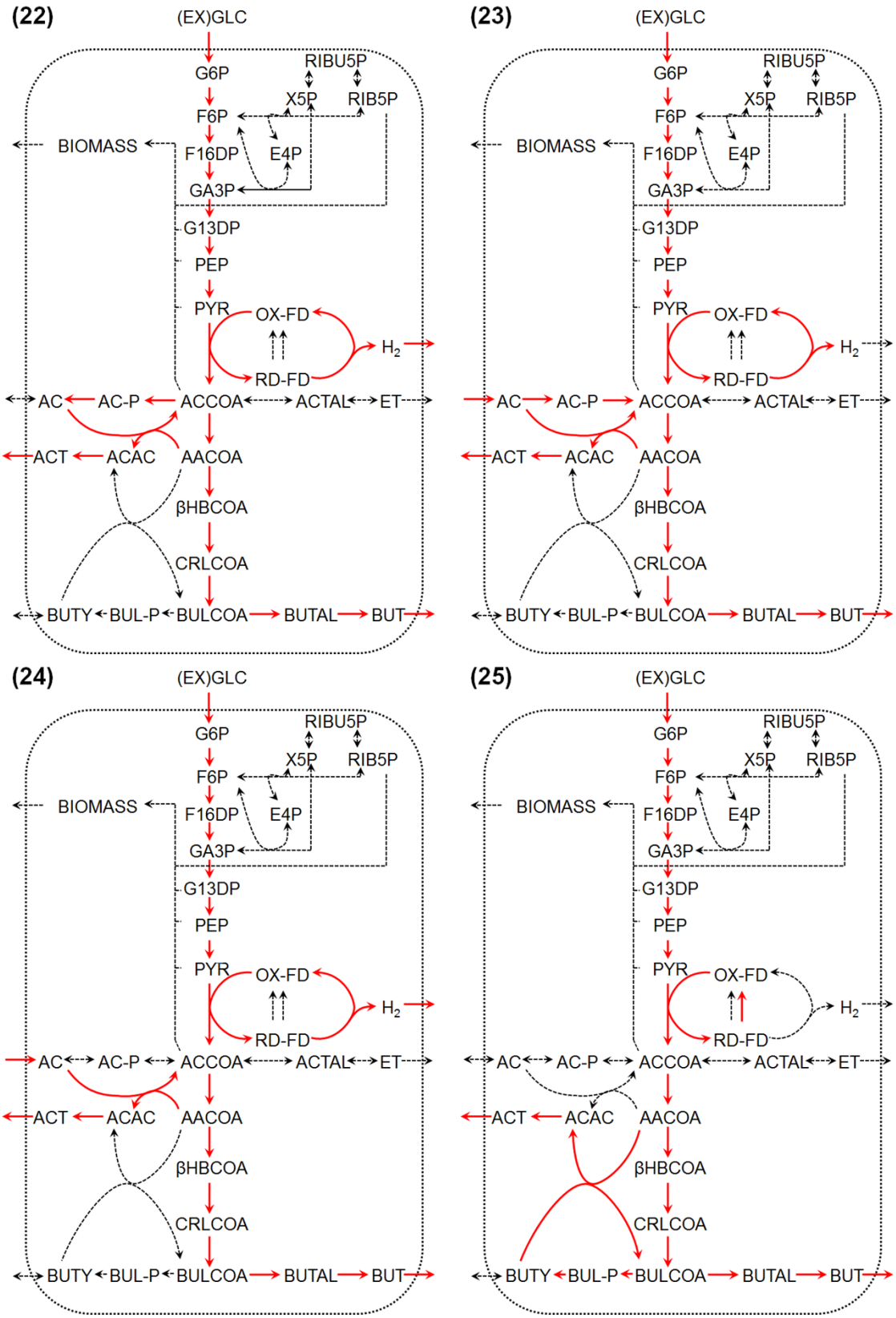
(22)
(23)
(24)
(25)
(EX)GLC
G6P
F6P
F16DP
GA3P
G13DP
PEP
PYR
RIBU5P
X5P
RIB5P
E4P
BIOMASS
OX-FD
RD-FD
H2
AC
AC-P
ACCOA
ACTAL
ET
ACT
ACAC
AACOA
βHBCOA
CRLCOA
BUTY
BUL-P
BULCOA
BUTAL
BUT

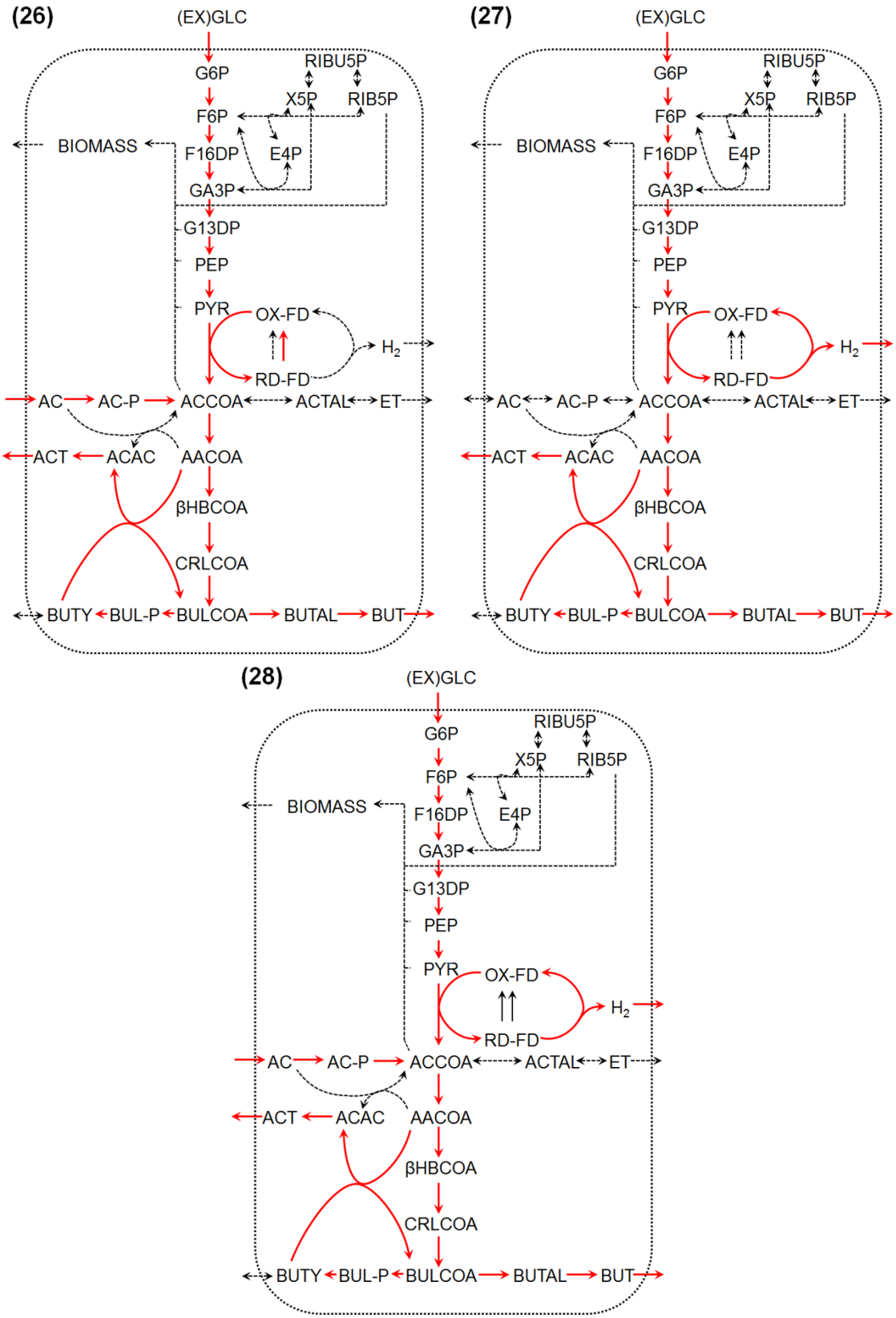
(26)
(EX)GLC
G6P
RIBU5P
X5P
RIB5P
F6P
BIOMASS
F16DP
E4P
GA3P
G13DP
PEP
PYR
OX-FD
H2
RD-FD
AC
AC-P
ACCOA
ACTAL
ET
ACT
ACAC
AACOA
βHBCOA
CRLCOA
BUTY
BUL-P
BULCOA
BUTAL
BUT
(27)
(EX)GLC
G6P
RIBU5P
X5P
RIB5P
F6P
BIOMASS
F16DP
E4P
GA3P
G13DP
PEP
PYR
OX-FD
H2
RD-FD
AC
AC-P
ACCOA
ACTAL
ET
ACT
ACAC
AACOA
βHBCOA
CRLCOA
BUTY
BUL-P
BULCOA
BUTAL
BUT
(28)
(EX)GLC
G6P
RIBU5P
X5P
RIB5P
F6P
BIOMASS
F16DP
E4P
GA3P
G13DP
PEP
PYR
OX-FD
H2
RD-FD
AC
AC-P
ACCOA
ACTAL
ET
ACT
ACAC
AACOA
βHBCOA
CRLCOA
BUTY
BUL-P
BULCOA
BUTAL
BUT

EMs involved in acidogenesis and solventogenesis (Group 3)

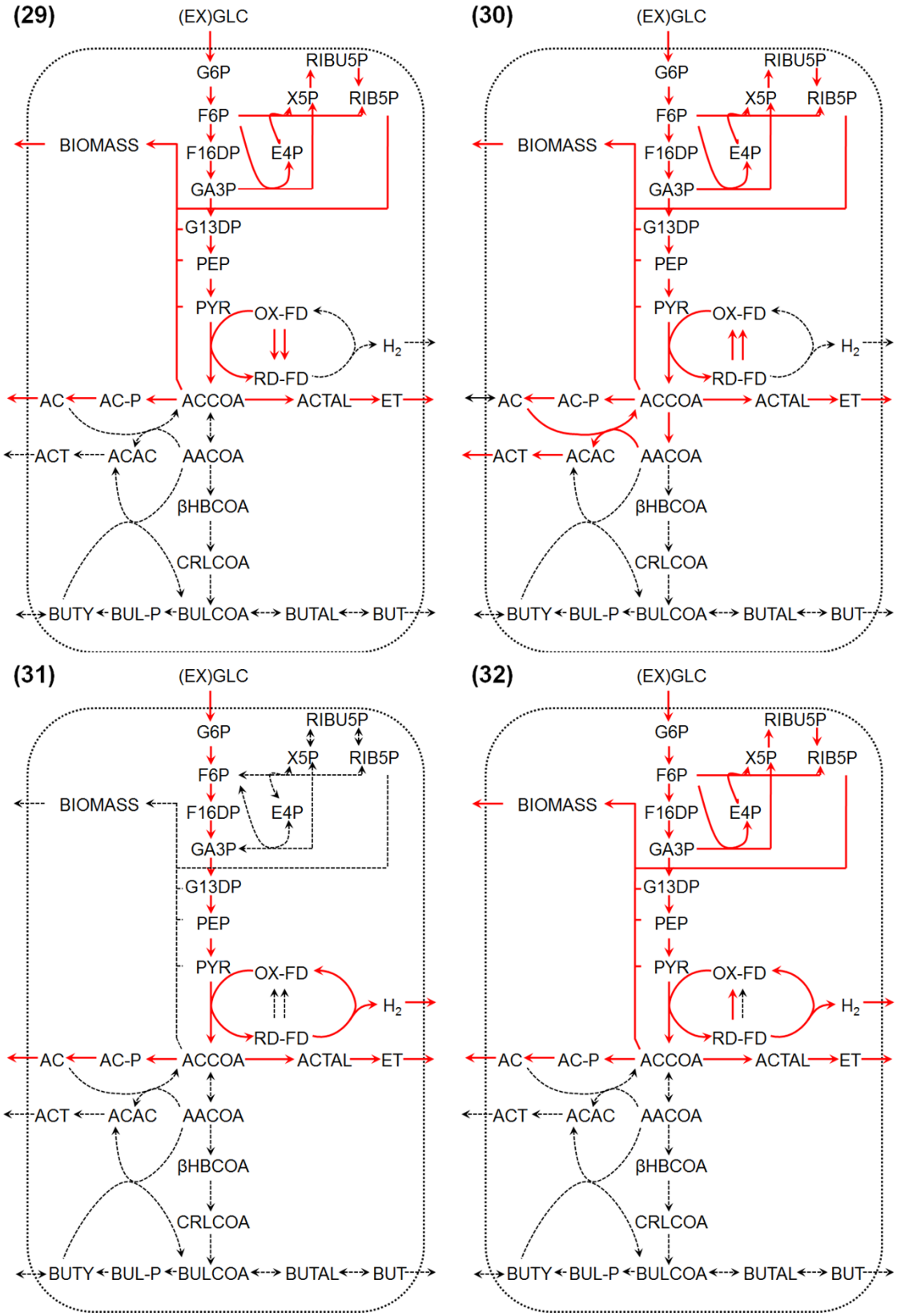

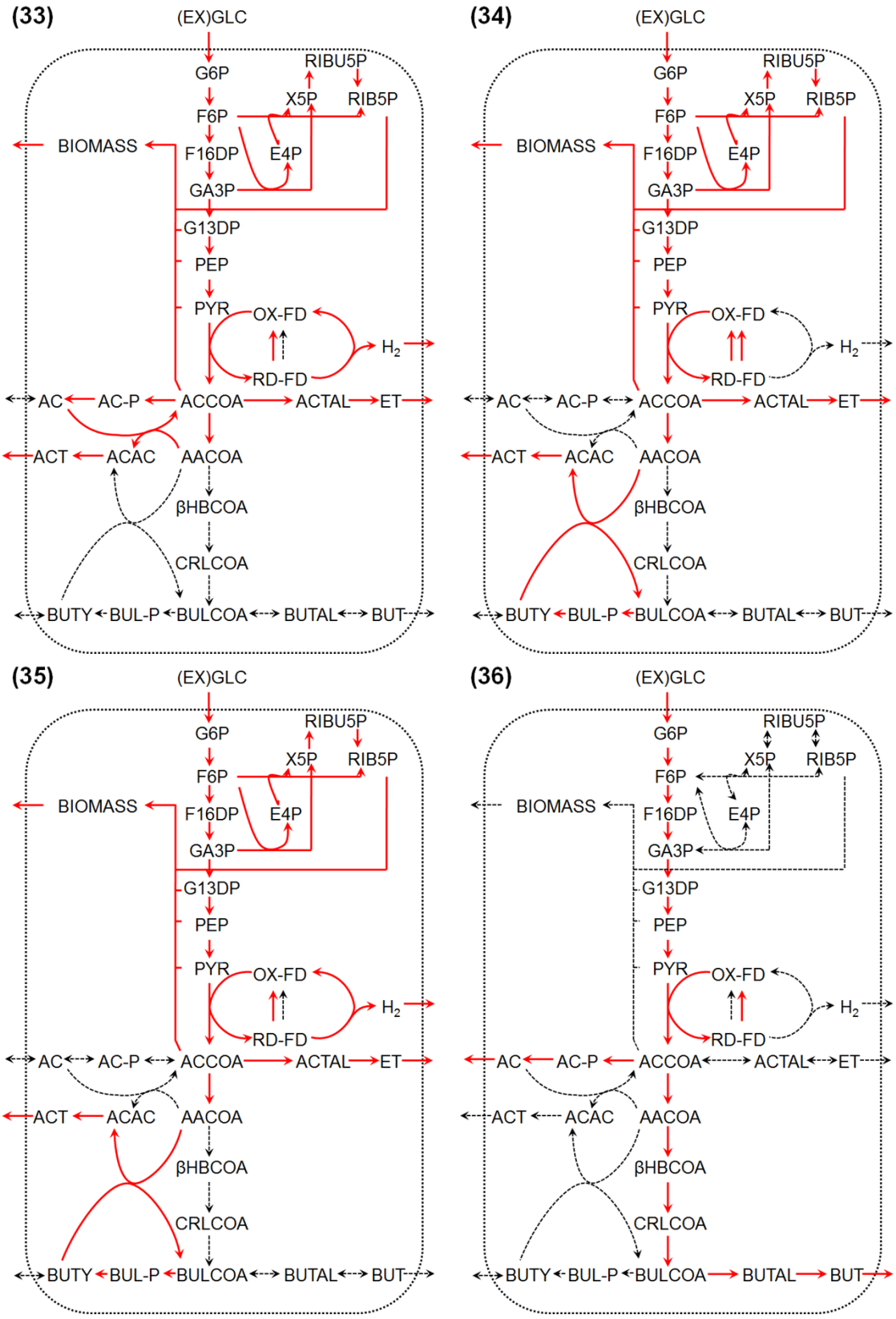
(33)
(EX)GLC
G6P
RIBU5P
X5P
RIB5P
F6P
BIOMASS
F16DP
E4P
GA3P
G13DP
PEP
PYR
OX-FD
H2
RD-FD
AC
AC-P
ACCOA
ACTAL
ET
ACT
ACAC
AACOA
βHBCOA
CRLCOA
BUTY
BUL-P
BULCOA
BUTAL
BUT
(34)
(EX)GLC
G6P
RIBU5P
X5P
RIB5P
F6P
BIOMASS
F16DP
E4P
GA3P
G13DP
PEP
PYR
OX-FD
H2
RD-FD
AC
AC-P
ACCOA
ACTAL
ET
ACT
ACAC
AACOA
βHBCOA
CRLCOA
BUTY
BUL-P
BULCOA
BUTAL
BUT
(35)
(EX)GLC
G6P
RIBU5P
X5P
RIB5P
F6P
BIOMASS
F16DP
E4P
GA3P
G13DP
PEP
PYR
OX-FD
H2
RD-FD
AC
AC-P
ACCOA
ACTAL
ET
ACT
ACAC
AACOA
βHBCOA
CRLCOA
BUTY
BUL-P
BULCOA
BUTAL
BUT
(36)
(EX)GLC
G6P
RIBU5P
X5P
RIB5P
F6P
BIOMASS
F16DP
E4P
GA3P
G13DP
PEP
PYR
OX-FD
H2
RD-FD
AC
AC-P
ACCOA
ACTAL
ET
ACT
ACAC
AACOA
βHBCOA
CRLCOA
BUTY
BUL-P
BULCOA
BUTAL
BUT

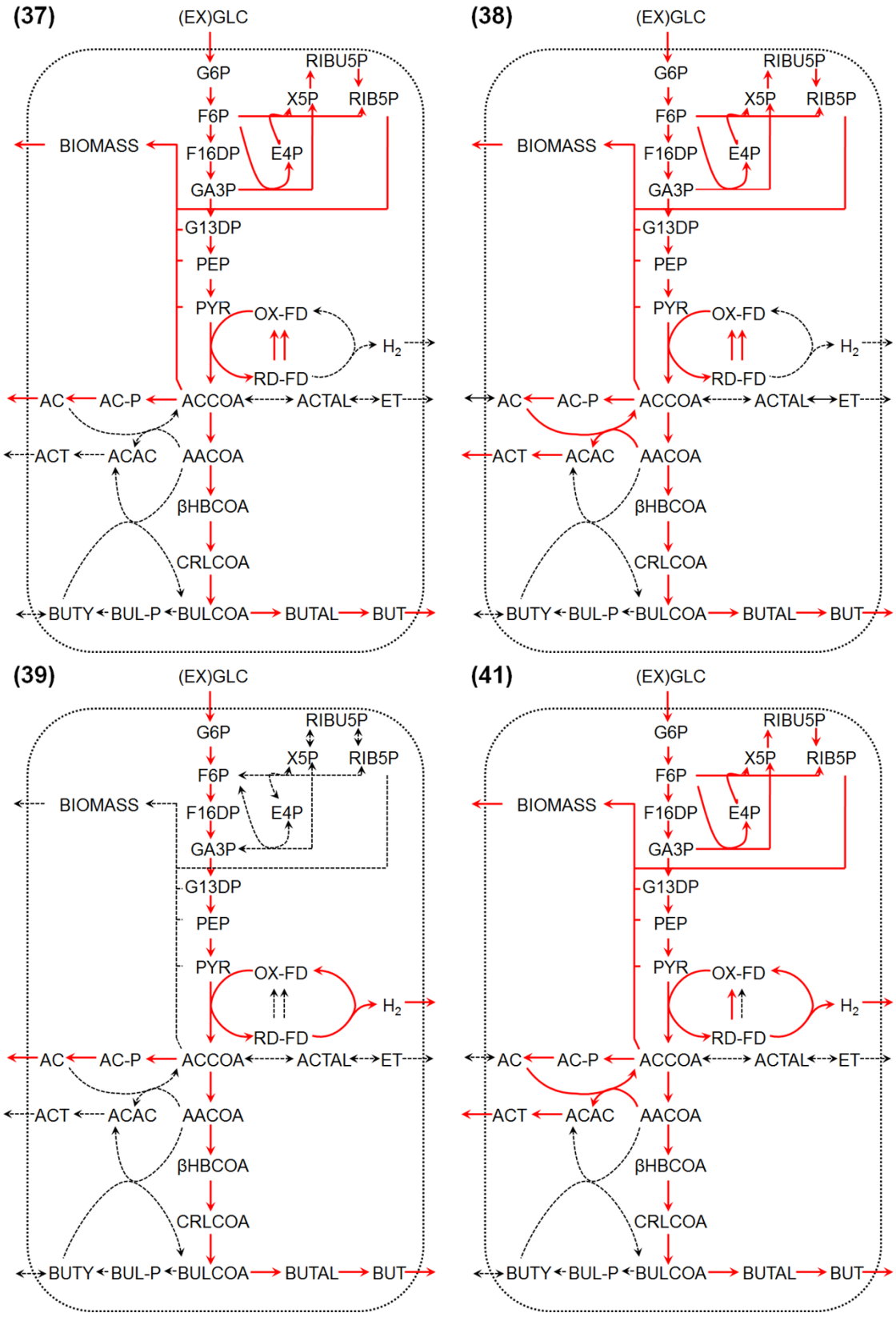
(37)
(38)
(39)
(41)
(EX)GLC
G6P
F6P
F16DP
GA3P
G13DP
PEP
PYR
RIBU5P
X5P
RIB5P
E4P
BIOMASS
OX-FD
RD-FD
H2
AC
AC-P
ACCOA
ACTAL
ET
ACT
ACAC
AACOA
βHBCOA
CRLCOA
BUTY
BUL-P
BULCOA
BUTAL
BUT

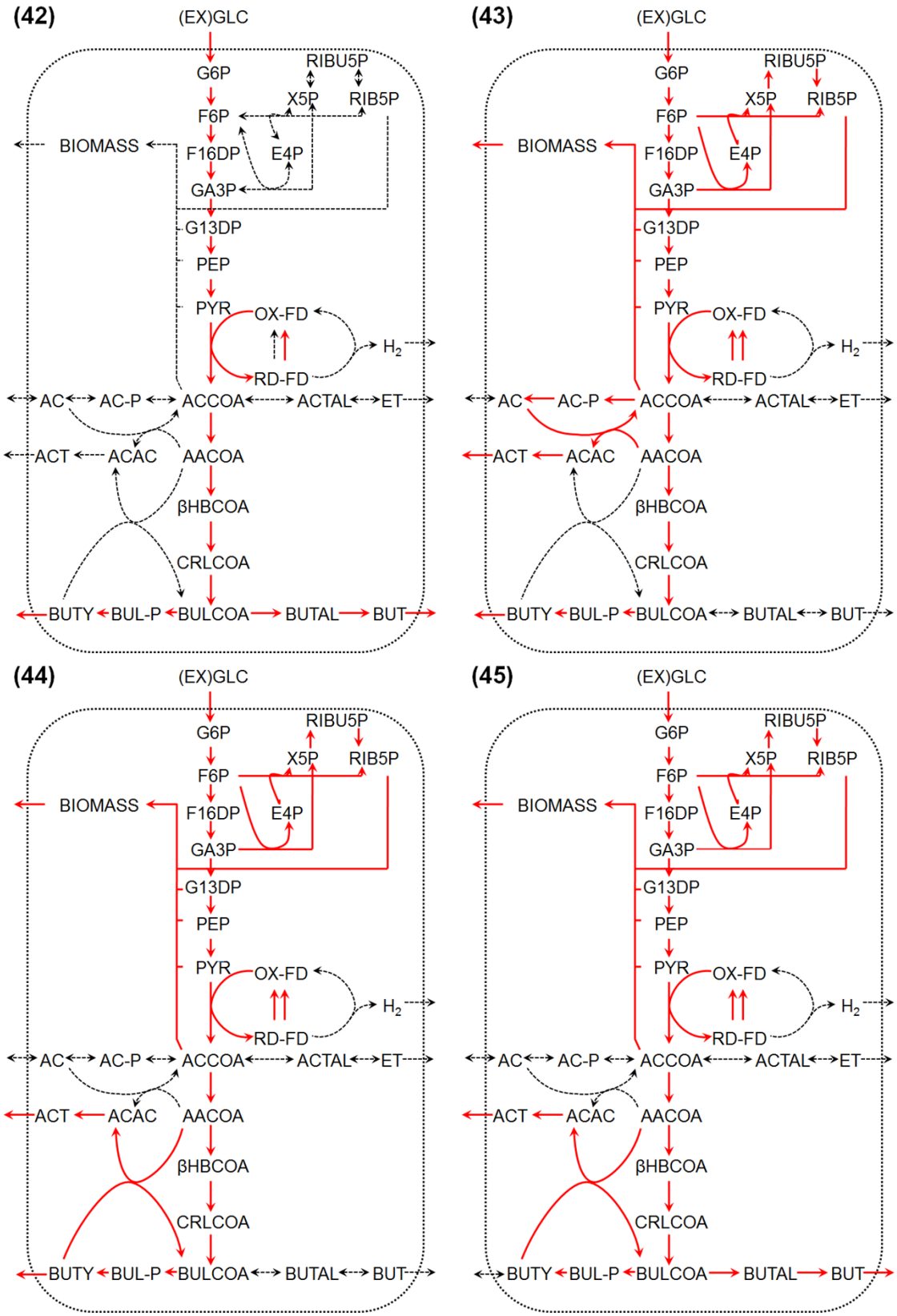
(42)
(43)
(44)
(45)
(EX)GLC
G6P
F6P
F16DP
GA3P
G13DP
PEP
PYR
RIBU5P
X5P
RIB5P
E4P
BIOMASS
OX-FD
RD-FD
H2
AC
AC-P
ACCOA
ACTAL
ET
ACT
ACAC
AACOA
βHBCOA
CRLCOA
BUTY
BUL-P
BULCOA
BUTAL
BUT

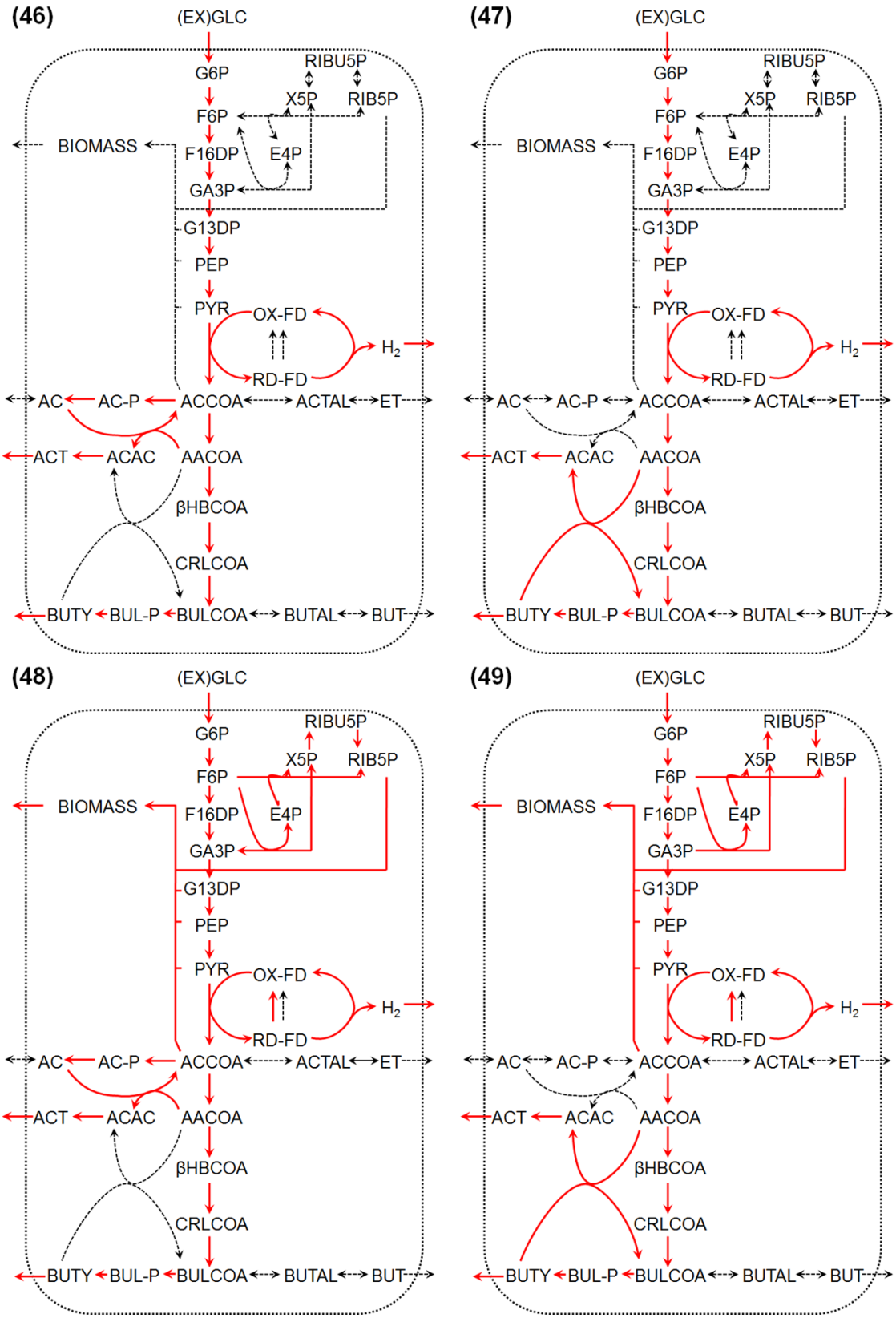
(46)
(47)
(48)
(49)
(EX)GLC
G6P
F6P
F16DP
GA3P
G13DP
PEP
PYR
RIBU5P
X5P
RIB5P
E4P
BIOMASS
OX-FD
RD-FD
H2
AC
AC-P
ACCOA
ACTAL
ET
ACT
ACAC
AACOA
βHBCOA
CRLCOA
BUTY
BUL-P
BULCOA
BUTAL
BUT

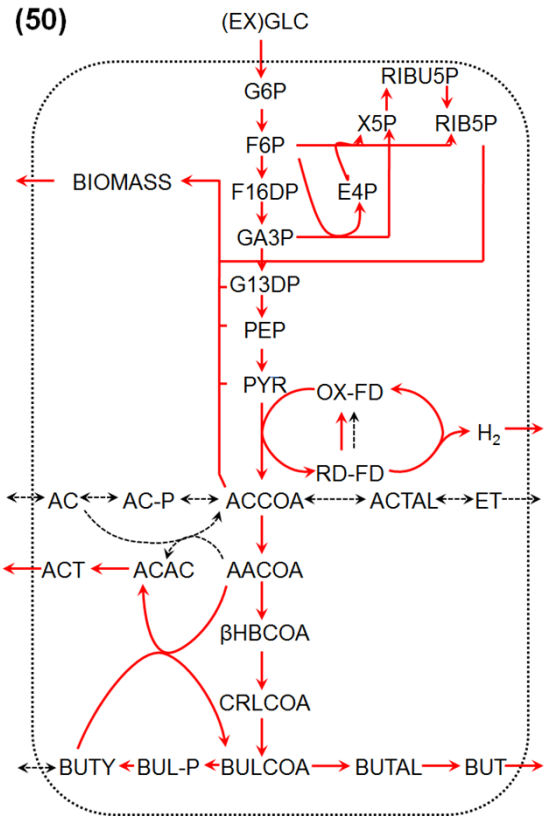
(50)
(EX)GLC
G6P
RIBU5P
X5P
RIB5P
F6P
BIOMASS
F16DP
E4P
GA3P
G13DP
PEP
PYR
OX-FD
H2
RD-FD
AC
AC-P
ACCOA
ACTAL
ET
ACT
ACAC
AACOA
βHBCOA
CRLCOA
BUTY
BUL-P
BULCOA
BUTAL
BUT

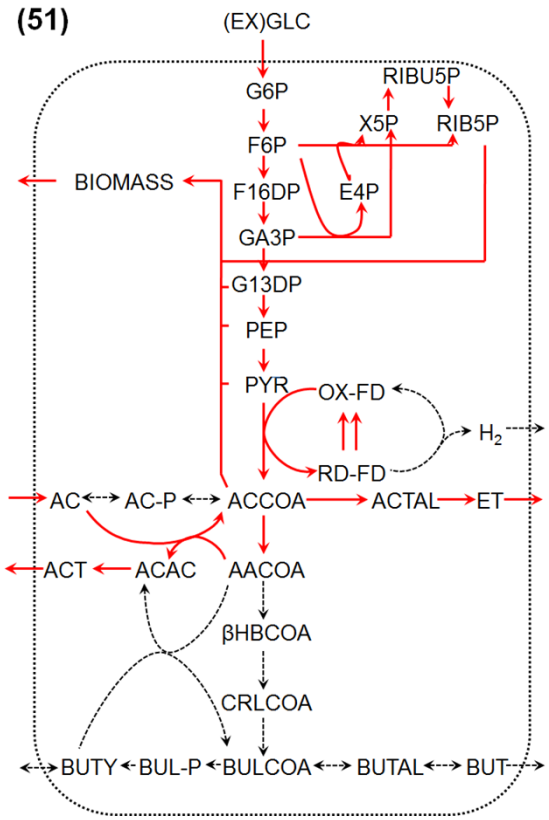
(51)
(EX)GLC
G6P
RIBU5P
X5P
RIB5P
F6P
BIOMASS
F16DP
E4P
GA3P
G13DP
PEP
PYR
OX-FD
H2
RD-FD
AC
AC-P
ACCOA
ACTAL
ET
ACT
ACAC
AACOA
βHBCOA
CRLCOA
BUTY
BUL-P
BULCOA
BUTAL
BUT

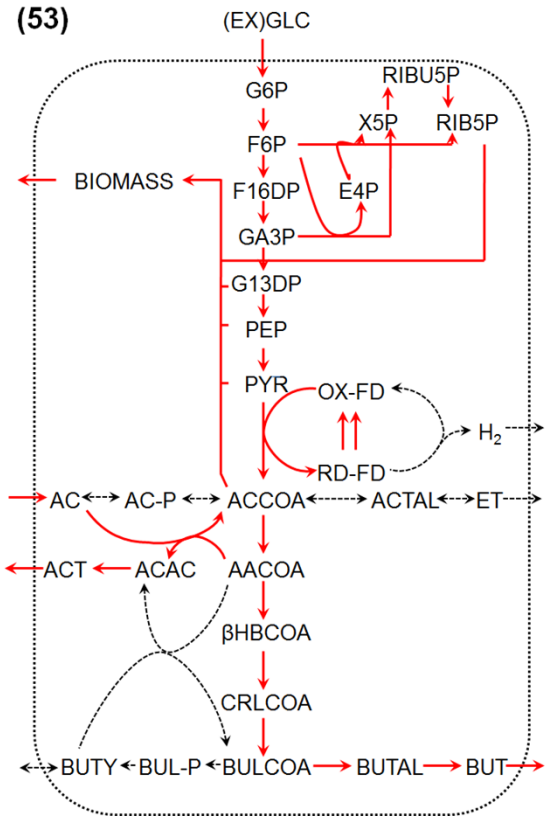
(53)
(EX)GLC
G6P
RIBU5P
X5P
RIB5P
F6P
BIOMASS
F16DP
E4P
GA3P
G13DP
PEP
PYR
OX-FD
H2
RD-FD
AC
AC-P
ACCOA
ACTAL
ET
ACT
ACAC
AACOA
βHBCOA
CRLCOA
BUTY
BUL-P
BULCOA
BUTAL
BUT

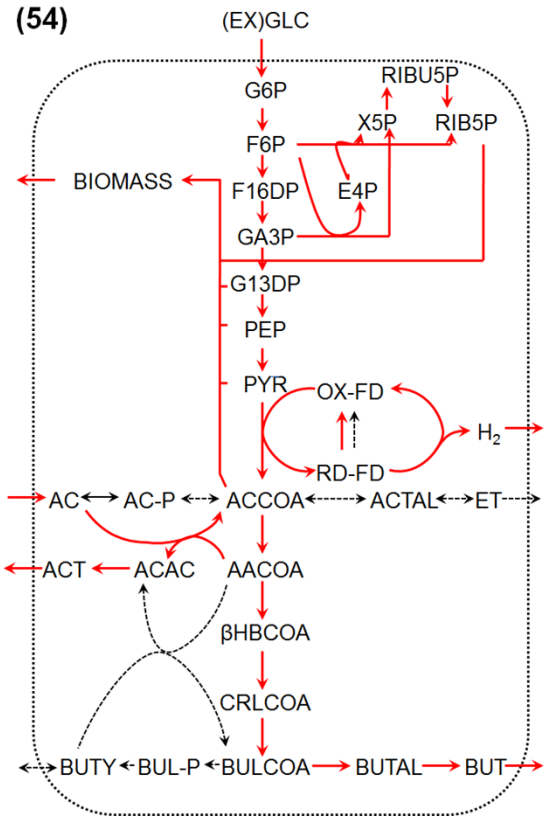
(54)
(EX)GLC
G6P
RIBU5P
X5P
RIB5P
F6P
BIOMASS
F16DP
E4P
GA3P
G13DP
PEP
PYR
OX-FD
H2
RD-FD
AC
AC-P
ACCOA
ACTAL
ET
ACT
ACAC
AACOA
βHBCOA
CRLCOA
BUTY
BUL-P
BULCOA
BUTAL
BUT

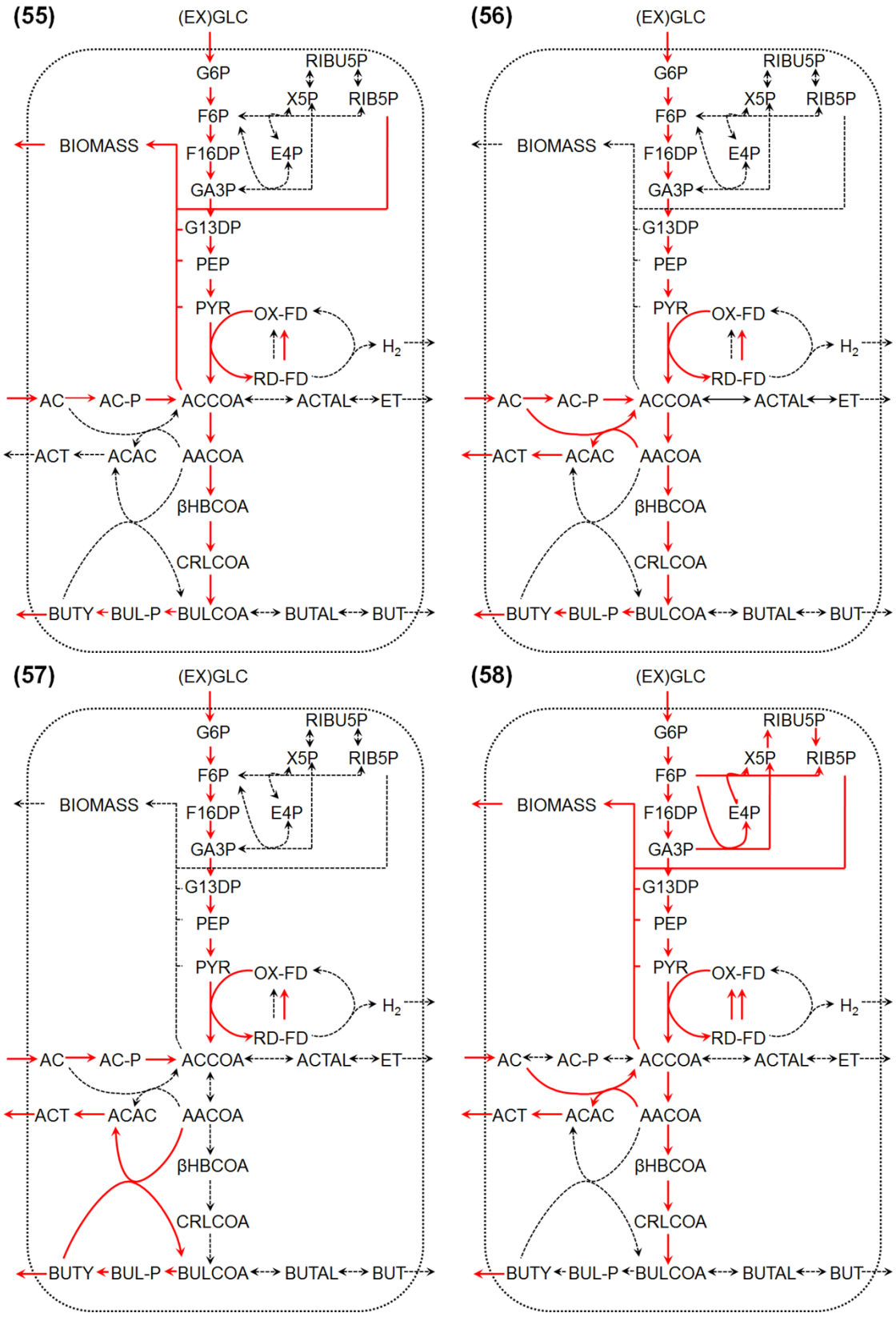
(55)
(56)
(57)
(58)
(EX)GLC
G6P
F6P
F16DP
GA3P
G13DP
PEP
PYR
RIBU5P
X5P
RIB5P
E4P
BIOMASS
OX-FD
RD-FD
H2
AC
AC-P
ACCOA
ACTAL
ET
ACT
ACAC
AACOA
βHBCOA
CRLCOA
BUTY
BUL-P
BULCOA
BUTAL
BUT

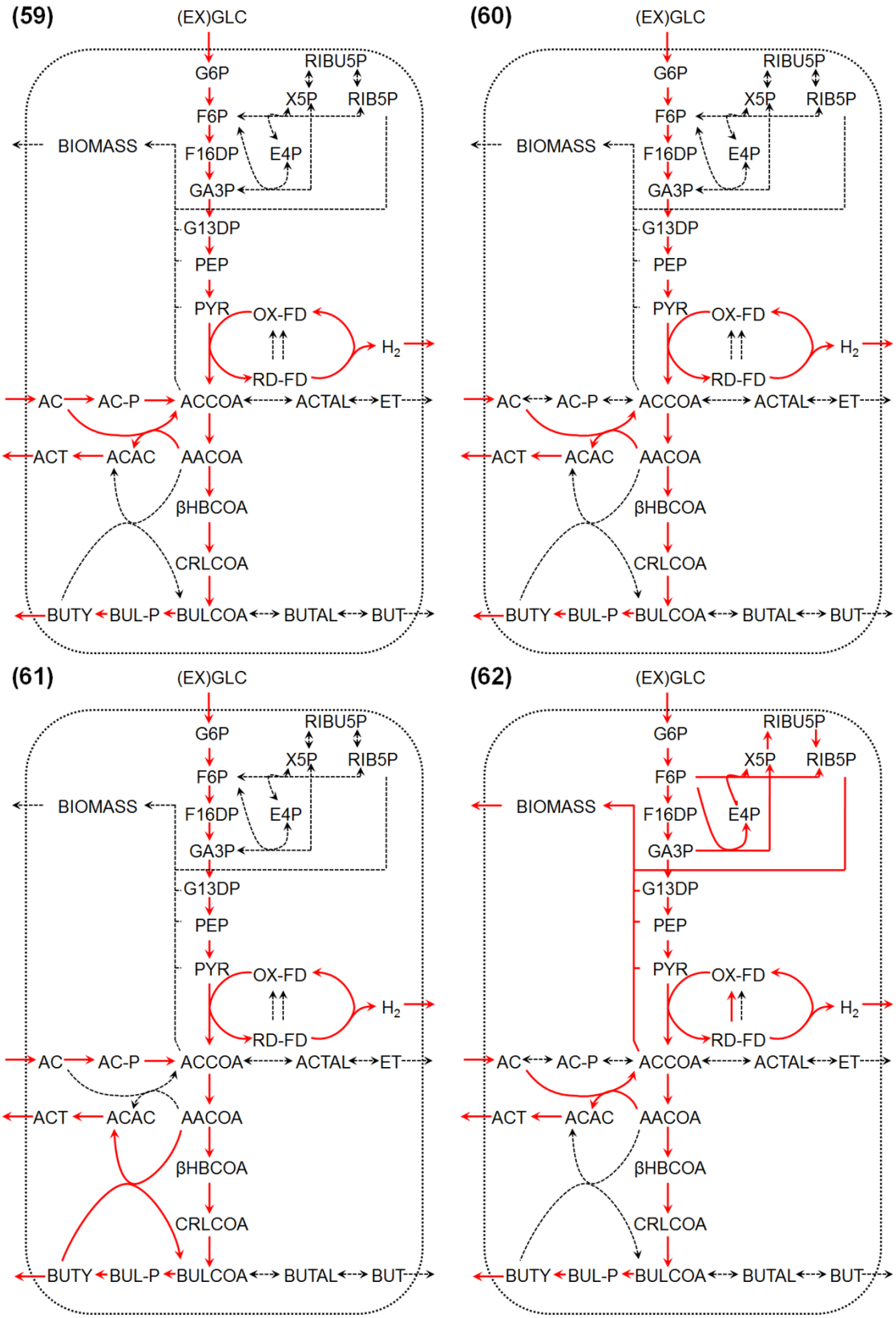
(59)
(60)
(61)
(62)
(EX)GLC
G6P
F6P
F16DP
GA3P
G13DP
PEP
PYR
RIBU5P
X5P
RIB5P
E4P
BIOMASS
OX-FD
RD-FD
H2
AC
AC-P
ACCOA
ACTAL
ET
ACT
ACAC
AACOA
βHBCOA
CRLCOA
BUTY
BUL-P
BULCOA
BUTAL
BUT

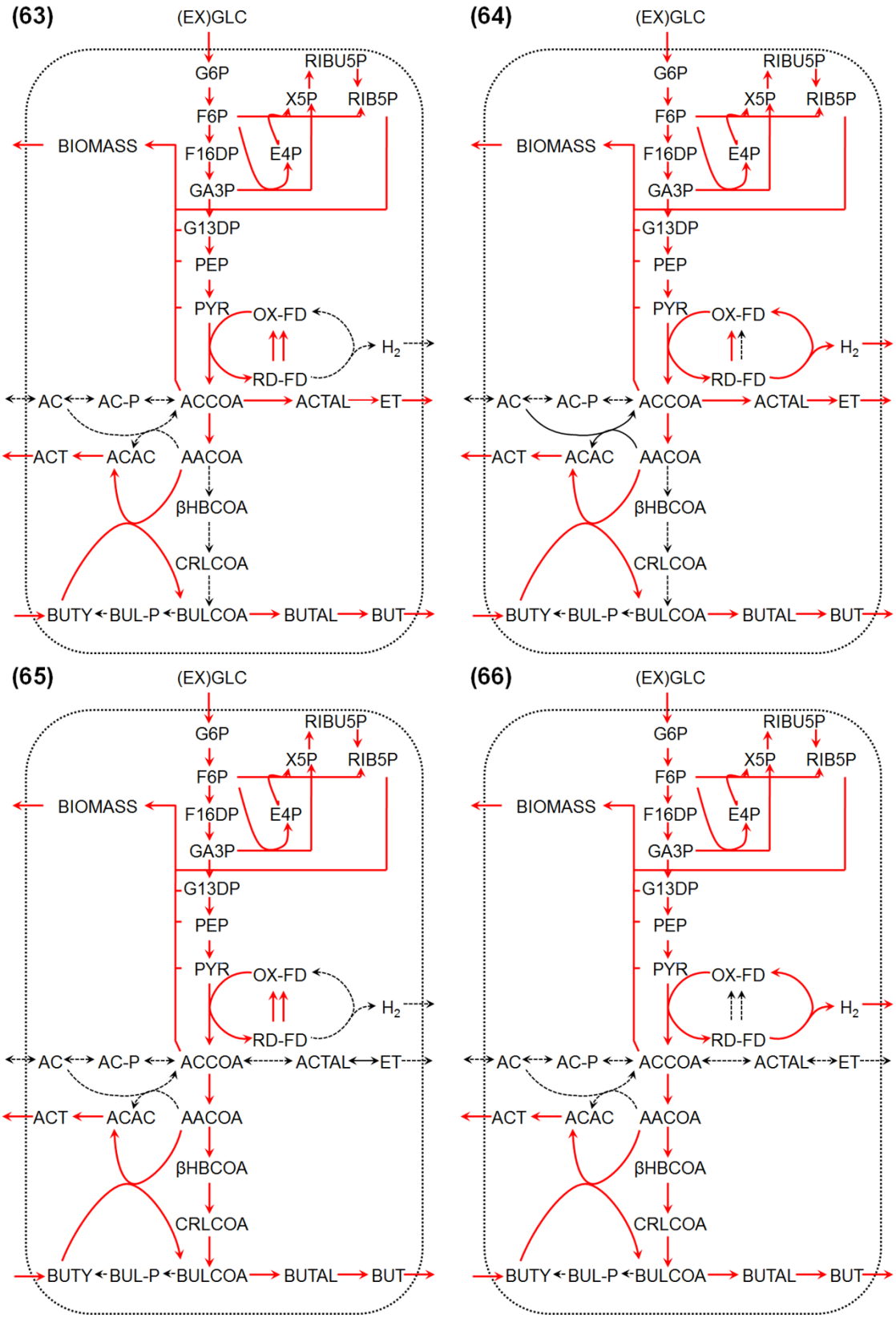
(63)
(EX)GLC
G6P
RIBU5P
X5P
RIB5P
F6P
BIOMASS
F16DP
E4P
GA3P
G13DP
PEP
PYR
OX-FD
H2
RD-FD
AC
AC-P
ACCOA
ACTAL
ET
ACT
ACAC
AACOA
βHBCOA
CRLCOA
BUTY
BUL-P
BULCOA
BUTAL
BUT
(64)
(EX)GLC
G6P
RIBU5P
X5P
RIB5P
F6P
BIOMASS
F16DP
E4P
GA3P
G13DP
PEP
PYR
OX-FD
H2
RD-FD
AC
AC-P
ACCOA
ACTAL
ET
ACT
ACAC
AACOA
βHBCOA
CRLCOA
BUTY
BUL-P
BULCOA
BUTAL
BUT
(65)
(EX)GLC
G6P
RIBU5P
X5P
RIB5P
F6P
BIOMASS
F16DP
E4P
GA3P
G13DP
PEP
PYR
OX-FD
H2
RD-FD
AC
AC-P
ACCOA
ACTAL
ET
ACT
ACAC
AACOA
βHBCOA
CRLCOA
BUTY
BUL-P
BULCOA
BUTAL
BUT
(66)
(EX)GLC
G6P
RIBU5P
X5P
RIB5P
F6P
BIOMASS
F16DP
E4P
GA3P
G13DP
PEP
PYR
OX-FD
H2
RD-FD
AC
AC-P
ACCOA
ACTAL
ET
ACT
ACAC
AACOA
βHBCOA
CRLCOA
BUTY
BUL-P
BULCOA
BUTAL
BUT

(67)

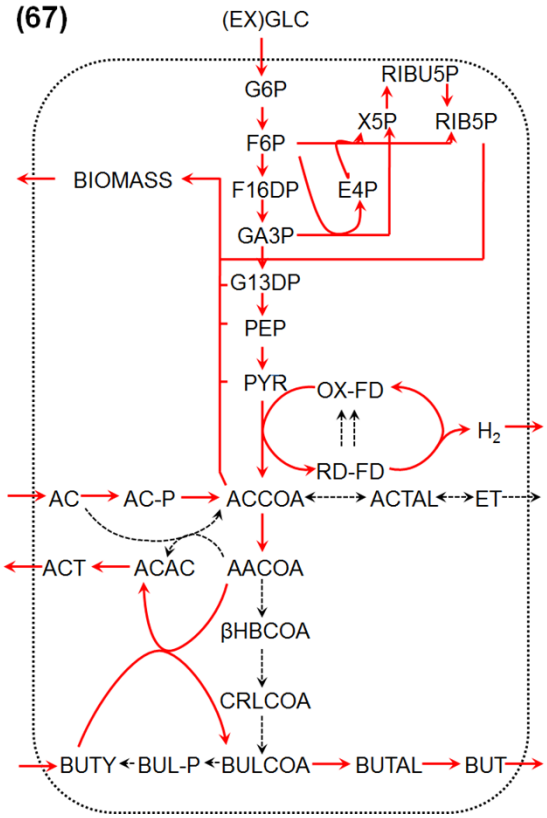
(EX)GLC
G6P
F6P
F16DP
GA3P
G13DP
PEP
PYR
RIBU5P
X5P
RIB5P
E4P
BIOMASS
OX-FD
RD-FD
H2
AC
AC-P
ACCOA
ACTAL
ET
ACT
ACAC
AACOA
βHBCOA
CRLCOA
BUTY
BUL-P
BULCOA
BUTAL
BUT

Figure S2

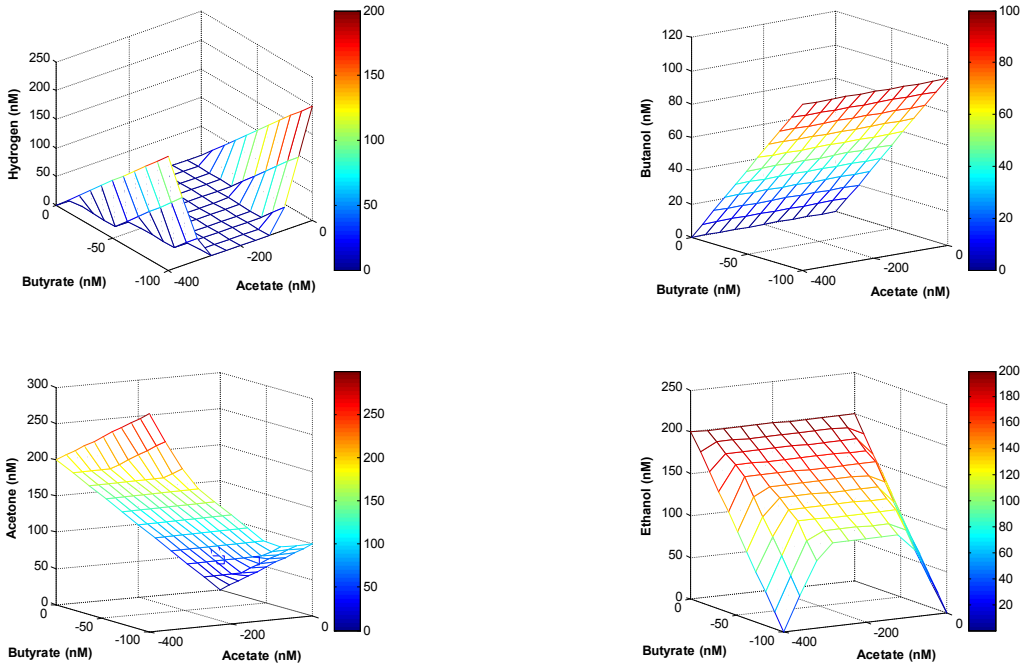
Hydrogen (nM)
Butyrate (nM)
Acetate (nM)
Butanol (nM)
Butyrate (nM)
Acetate (nM)
Acetone (nM)
Butyrate (nM)
Acetate (nM)
Ethanol (nM)
Butyrate (nM)
Acetate (nM)

Figure S3

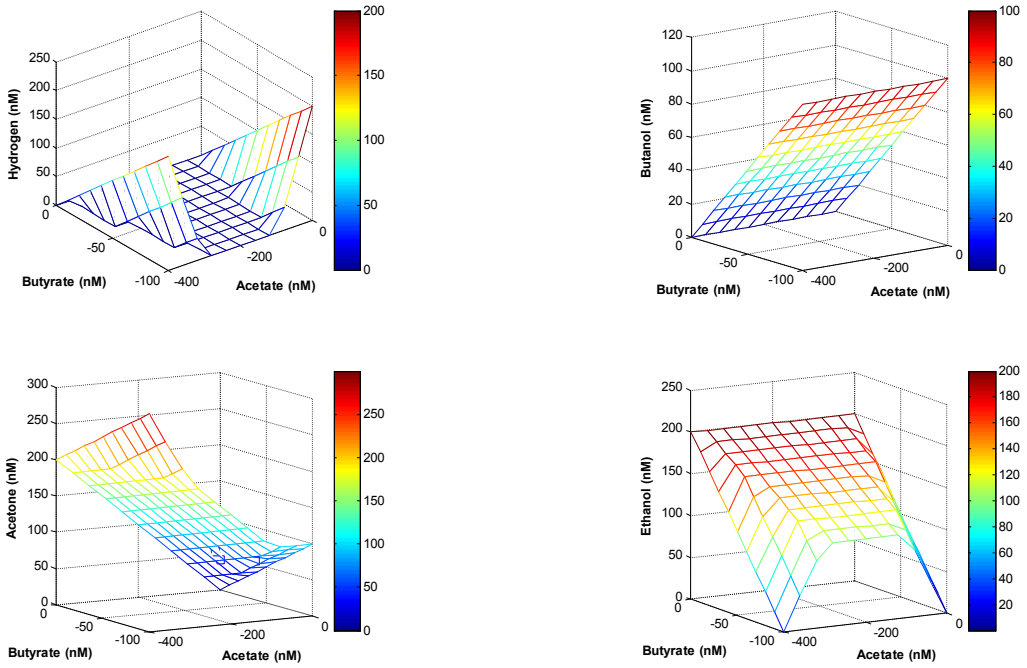
Hydrogen (nM)
Butyrate (nM)
Acetate (nM)
Butanol (nM)
Butyrate (nM)
Acetate (nM)
Acetone (nM)
Butyrate (nM)
Acetate (nM)
Ethanol (nM)
Butyrate (nM)
Acetate (nM)

Figure S4

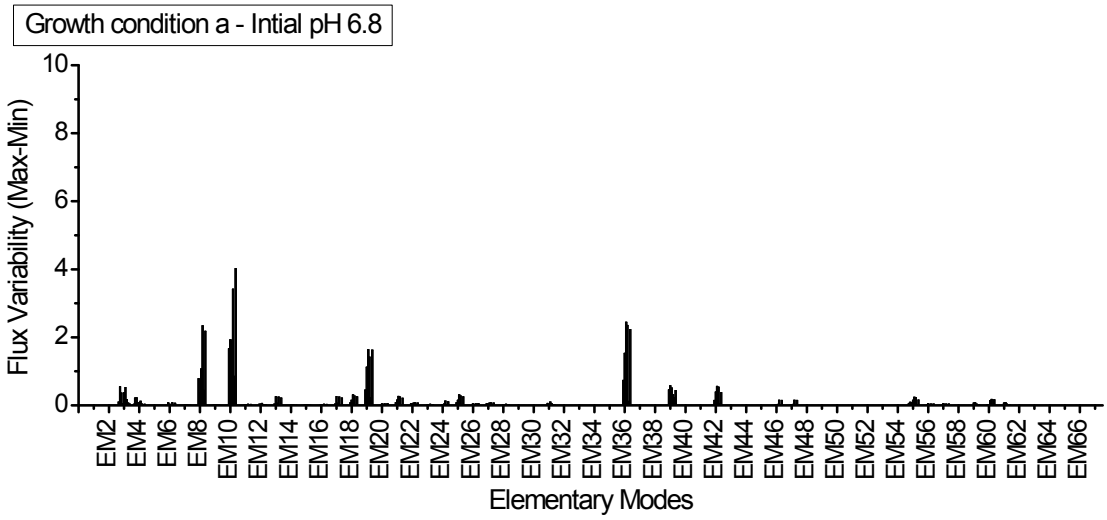
Growth condition a - Intial pH 6.8
Flux Variability (Max-Min)
0
2
4
6
8
10
EM2
EM4
EM6
EM8
EM10
EM12
EM14
EM16
EM18
EM20
EM22
EM24
EM26
EM28
EM30
EM32
EM34
EM36
EM38
EM40
EM42
EM44
EM46
EM48
EM50
EM52
EM54
EM56
EM58
EM60
EM62
EM64
EM66
Elementary Modes

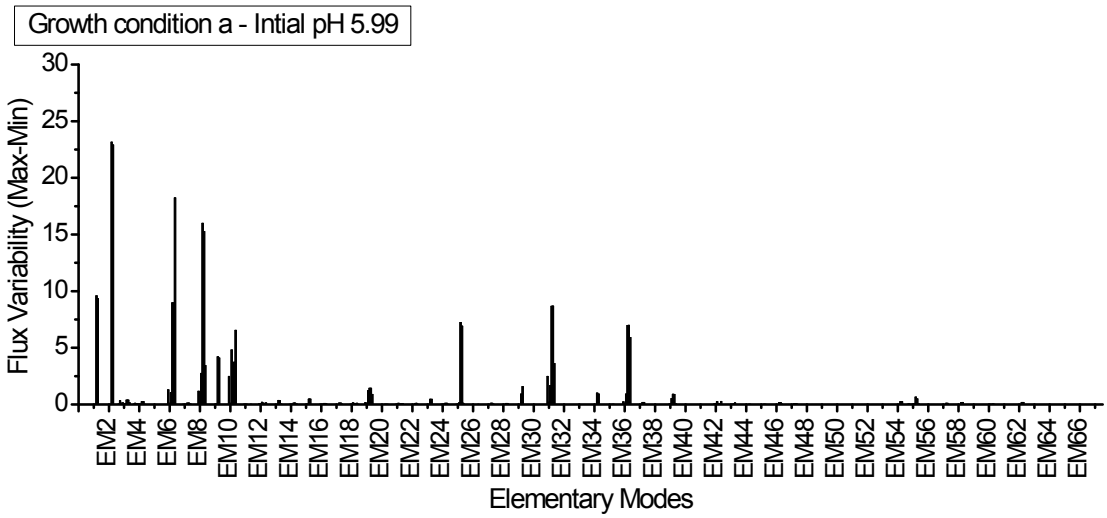
Growth condition a - Intial pH 5.99
Flux Variability (Max-Min)
0
5
10
15
20
25
30
EM2
EM4
EM6
EM8
EM10
EM12
EM14
EM16
EM18
EM20
EM22
EM24
EM26
EM28
EM30
EM32
EM34
EM36
EM38
EM40
EM42
EM44
EM46
EM48
EM50
EM52
EM54
EM56
EM58
EM60
EM62
EM64
EM66
Elementary Modes

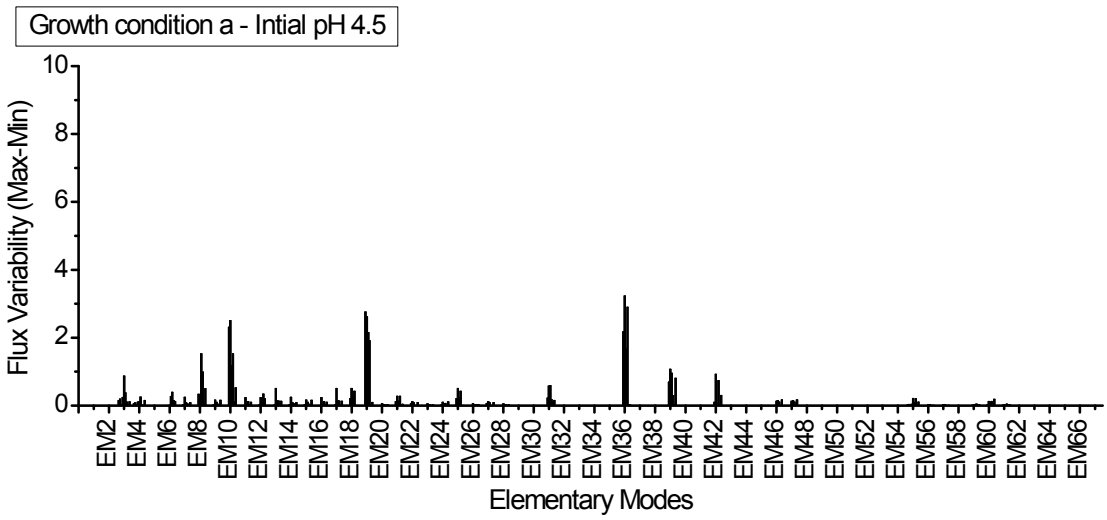
Growth condition a - Intial pH 4.5
Flux Variability (Max-Min)
0
2
4
6
8
10
EM2
EM4
EM6
EM8
EM10
EM12
EM14
EM16
EM18
EM20
EM22
EM24
EM26
EM28
EM30
EM32
EM34
EM36
EM38
EM40
EM42
EM44
EM46
EM48
EM50
EM52
EM54
EM56
EM58
EM60
EM62
EM64
EM66
Elementary Modes

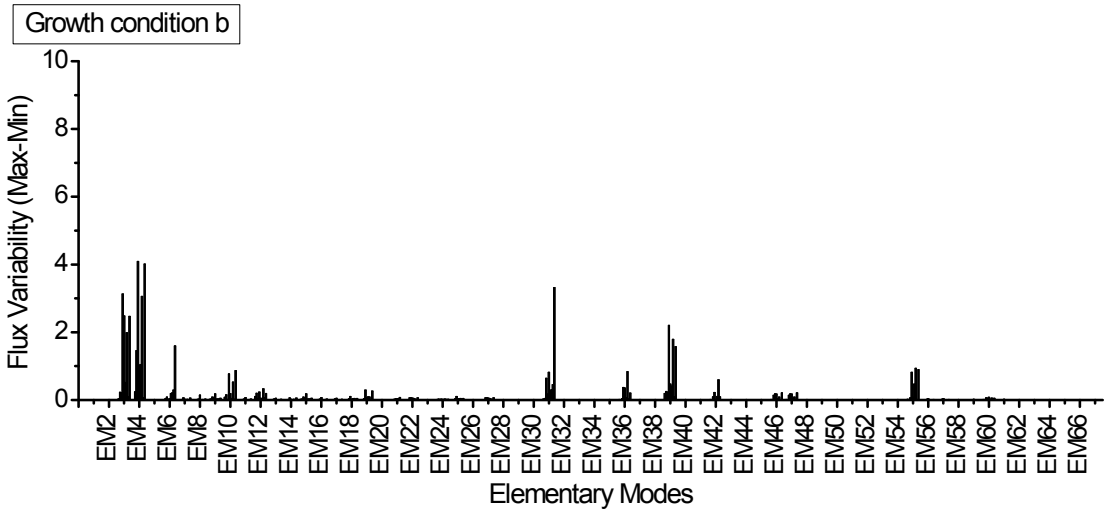
Growth condition b
Flux Variability (Max-Min)
0
2
4
6
8
10
EM2
EM4
EM6
EM8
EM10
EM12
EM14
EM16
EM18
EM20
EM22
EM24
EM26
EM28
EM30
EM32
EM34
EM36
EM38
EM40
EM42
EM44
EM46
EM48
EM50
EM52
EM54
EM56
EM58
EM60
EM62
EM64
EM66
Elementary Modes

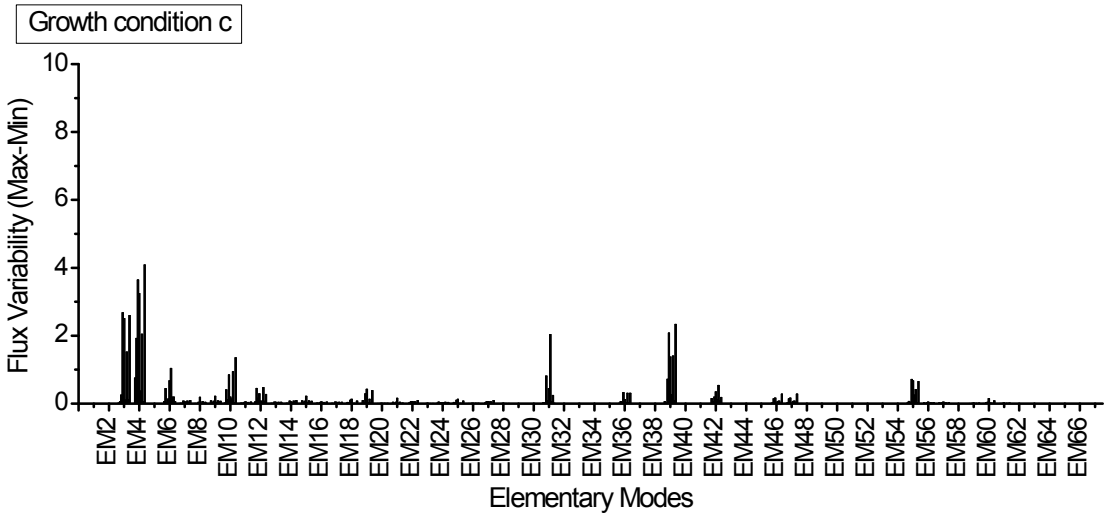
Growth condition c
Flux Variability (Max-Min)
0
2
4
6
8
10
EM2
EM4
EM6
EM8
EM10
EM12
EM14
EM16
EM18
EM20
EM22
EM24
EM26
EM28
EM30
EM32
EM34
EM36
EM38
EM40
EM42
EM44
EM46
EM48
EM50
EM52
EM54
EM56
EM58
EM60
EM62
EM64
EM66
Elementary Modes

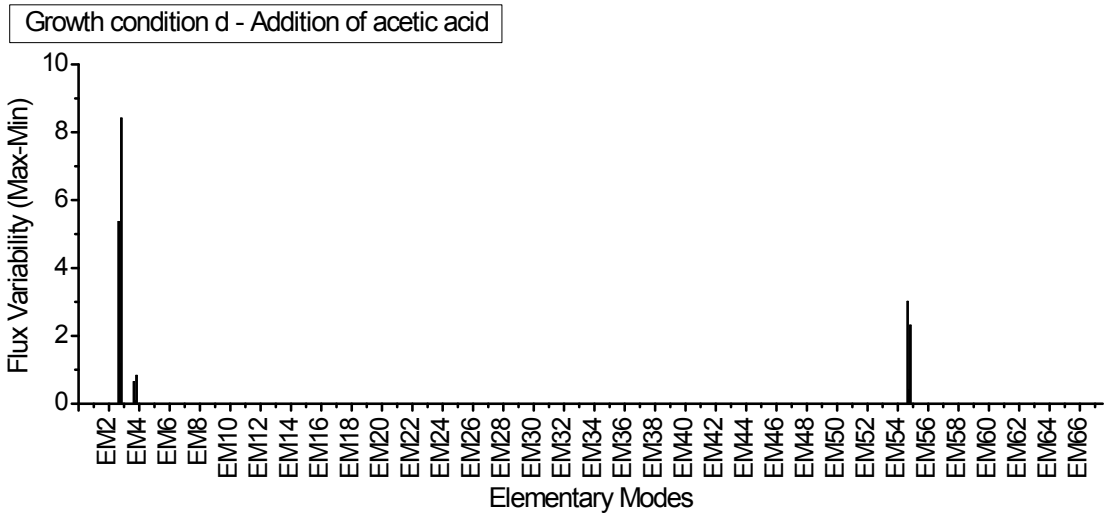
Growth condition d - Addition of acetic acid
Flux Variability (Max-Min)
0
2
4
6
8
10
EM2
EM4
EM6
EM8
EM10
EM12
EM14
EM16
EM18
EM20
EM22
EM24
EM26
EM28
EM30
EM32
EM34
EM36
EM38
EM40
EM42
EM44
EM46
EM48
EM50
EM52
EM54
EM56
EM58
EM60
EM62
EM64
EM66
Elementary Modes

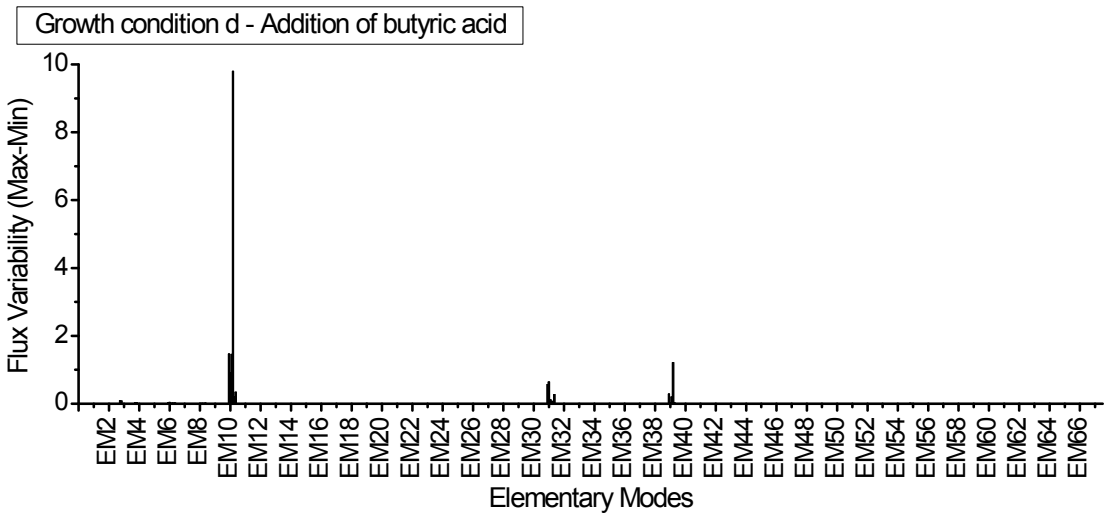
Growth condition d - Addition of butyric acid
Flux Variability (Max-Min)
0
2
4
6
8
10
EM2
EM4
EM6
EM8
EM10
EM12
EM14
EM16
EM18
EM20
EM22
EM24
EM26
EM28
EM30
EM32
EM34
EM36
EM38
EM40
EM42
EM44
EM46
EM48
EM50
EM52
EM54
EM56
EM58
EM60
EM62
EM64
EM66
Elementary Modes

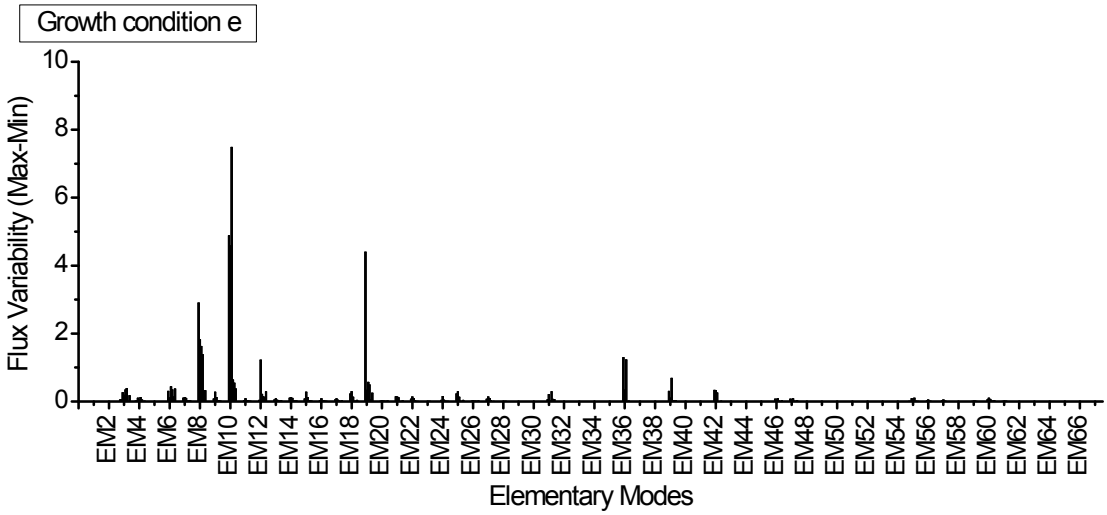
Growth condition e
Flux Variability (Max-Min)
0
2
4
6
8
10
EM2
EM4
EM6
EM8
EM10
EM12
EM14
EM16
EM18
EM20
EM22
EM24
EM26
EM28
EM30
EM32
EM34
EM36
EM38
EM40
EM42
EM44
EM46
EM48
EM50
EM52
EM54
EM56
EM58
EM60
EM62
EM64
EM66
Elementary Modes

Table S1

Abbreviation	Full name
(EX)AC	External acetate
(EX)ACT	External acetone
(EX)BIOMASS	External biomass
(EX)BUT	External butanol
(EX)BUTY	External butyrate
(EX)CO2	External carbon dioxide
(EX)ET	External ethanol
(EX)GLC	External glucose
(EX)H2	External hydrogen
(EX)H2O	External water
AACOA	Acetoacetyl-CoA
AC	Acetate
ACAC	Acetoacetate
ACCOA	Acetyl-CoA
AC-P	Acetyl phosphate
ACT	Acetone
ACTAL	Acetaldehyde
ADP	Adenosine-5-diphosphate
ATP	Adenosine-5-triphosphate
BETA-HBCOA	β-Hydroxybutyryl-CoA
BIOMASS	Biomass
BULCOA	Butyryl-CoA; Butanoyl-CoA
BUL-P	Butyryl phosphate; Butanoyl phosphate
BUT	Butanol
BUTAL	Butyraldehyde
BUTY	Butyrate
CO2	Carbon dioxide
COA	Coenzyme-A
CRLCOA	Crotonyl-CoA
E4P	Erythrose-4-phosphate
ET	Ethanol
F16DP	Fructose-1,6-diphosphate
F6P	Fructose-6-phosphate
G13DP	Glycerate-1,3-diphosphate
G6P	Glucose-6-phosphate

GA3P	Glyceraldehyde-3-phosphate
H2	Hydrogen molecule
H2O	Water
NAD	Nicotinamide adenine dinucleotide (oxidized)
NADH	Nicotinamide adenine dinucleotide (reduced)
NADP	Nicotinamide adenine dinucleotide phosphate (oxidized)
NADPH	Nicotinamide adenine dinucleotide phosphate (reduced)
OX-FD	Ferredoxin (oxidized)
P	Inorganic orthophosphate
PEP	Phosphoenolpyruvate
PYR	Pyruvate
RD-FD	Ferredoxin (reduced)
RIB5P	Ribose-5-phosphate
RIBU5P	Ribulose-5-phosphate
SED7P	Sedoheptulose-7-phosphate
X5P	Xylulose-5-phosphate

Table S2

Reaction Name	Enzyme Name	Reversible (R) or Irrevesible (I)	Reaction	References
EMP PATHWAY				
EMP1	Phosphotransferase system	I	(EX)GLC + PEP = G6P + PYR	Lee et al., 2008; Senger and Papoutsakis, 2008a, 2008b; Gheshlaghi et al., 2009; Milne et al., 2011
EMP2	Glucose-6-phosphate isomerase	R	G6P = F6P	Lee et al., 2008; Senger and Papoutsakis, 2008a, 2008b; Gheshlaghi et al., 2009; Milne et al., 2012
EMP3	6-Phosphofructokinase	I	ATP + F6P = ADP + F16DP	Lee et al., 2008; Senger and Papoutsakis, 2008a, 2008b; Gheshlaghi et al., 2009; Milne et al., 2013
EMP4	Aldose	R	F16DP = 2 GA3P	Lee et al., 2008; Senger and Papoutsakis, 2008a, 2008b; Gheshlaghi et al., 2009; Milne et al., 2014
EMP5	Glyceraldehyde-3-phosphate dehydrogenase	R	GA3P + NAD = G13DP + NADH	Lee et al., 2008; Senger and Papoutsakis, 2008a, 2008b; Gheshlaghi et al., 2009; Milne et al., 2015
EMP6	Phosphoglycerate kinase + Phosphoglycerate mutase + Enalose	R	ADP + G13DP = ATP + H2O + PEP	Lee et al., 2008; Senger and Papoutsakis, 2008a, 2008b; Gheshlaghi et al., 2009; Milne et al., 2016
EMP7	Pyruvate kinase	I	ADP + PEP = ATP + PYR	Lee et al., 2008; Senger and Papoutsakis, 2008a, 2008b; Gheshlaghi et al., 2009; Milne et al., 2017
HYDROGEN PRODUCTION PATHWAY				
HPP1	Pyruvate-ferredoxin oxidoreductase	I	COA + OX-FD + PYR = ACCOA + CO2 + RD-FD	Lee et al., 2008; Senger and Papoutsakis, 2008a, 2008b; Gheshlaghi et al., 2009; Milne et al., 2011
HPP2	Ferredoxin-NADPH oxidoreductase	I	NADP + RD-FD = NADPH + OX-FD	Lee et al., 2008; Senger and Papoutsakis, 2008a, 2008b; Gheshlaghi et al., 2009; Milne et al., 2012
HPP3	Ferredoxin-NADH oxidoreductase	I	NAD + RD-FD = NADH + OX-FD	Lee et al., 2008; Senger and Papoutsakis, 2008a, 2008b; Gheshlaghi et al., 2009; Milne et al., 2013

HPP4	Hydrogenase	I	RD-FD = H2 + OX-FD	Lee et al., 2008; Senger and Papoutsakis, 2008a, 2008b; Gheshlaghi et al., 2009; Milne et al., 2014
ACID PRODUCTION PATHWAY				
APP1	Thiolase (Acetyl-CoA acetyltransferase)	R	2 ACCOA = AACOA + COA	Lee et al., 2008; Senger and Papoutsakis, 2008a, 2008b; Gheshlaghi et al., 2009; Milne et al., 2011
APP2	β-Hydroxybutyryl-CoA dehydrogenase	I	AACOA + NADH = 3 BETA-HBCOA + NAD	Lee et al., 2008; Senger and Papoutsakis, 2008a, 2008b; Gheshlaghi et al., 2009; Milne et al., 2012
APP3	Enoyl-CoA hydratase (crotonase)	I	3 BETA-HBCOA = CRLCOA	Lee et al., 2008; Senger and Papoutsakis, 2008a, 2008b; Gheshlaghi et al., 2009; Milne et al., 2013
APP4	butyryl-CoA dehydrogenase	I	CRLCOA + 2 NADH = BULCOA + 2 NAD	Lee et al., 2008; Senger and Papoutsakis, 2008a, 2008b; Gheshlaghi et al., 2009; Milne et al., 2014
APP5	Phosphotransacetylase (Phosphate acetyltransferase)	R	ACCOA = AC-P + COA	Lee et al., 2008; Senger and Papoutsakis, 2008a, 2008b; Gheshlaghi et al., 2009; Milne et al., 2015
APP6	Acetate kinase	R	AC-P + ADP = AC + ATP	Lee et al., 2008; Senger and Papoutsakis, 2008a, 2008b; Gheshlaghi et al., 2009; Milne et al., 2016
APP7	Phosphotransbutyrylase (Phosphate butyryltransferase)	I	BULCOA = BUL-P + COA	Lee et al., 2008; Senger and Papoutsakis, 2008a, 2008b; Gheshlaghi et al., 2009; Milne et al., 2017
APP8	Butyrate kinase	I	ADP + BUL-P = ATP + BUTY	Lee et al., 2008; Senger and Papoutsakis, 2008a, 2008b; Gheshlaghi et al., 2009; Milne et al., 2018
SOLVENT PRODUCTION PATHWAY				
SPP1	Acetaldehyde dehydrogenase	R	ACCOA + NADH = ACTAL + COA + NAD	Lee et al., 2008; Senger and Papoutsakis, 2008a, 2008b; Gheshlaghi et al., 2009; Milne et al., 2018
SPP2	Alcohol dehydrogenase	R	ACTAL + NADH = ET + NAD	Lee et al., 2008; Senger and Papoutsakis, 2008a, 2008b; Gheshlaghi et al., 2009; Milne et al., 2019
SPP3	Acetate-CoA-transferase	I	AACOA + AC = ACAC + ACCOA	Lee et al., 2008; Senger and Papoutsakis, 2008a, 2008b; Gheshlaghi et al., 2009;

				Milne et al., 2020
SPP4	Butyrate-CoA-transferase	I	AACOA + BUTY = ACAC + BULCOA	Lee et al., 2008; Senger and Papoutsakis, 2008a, 2008b; Gheshlaghi et al., 2009; Milne et al., 2021
SPP5	Acetoacetate decarboxylase	I	ACAC = ACT + CO2	Lee et al., 2008; Senger and Papoutsakis, 2008a, 2008b; Gheshlaghi et al., 2009; Milne et al., 2022
SPP6	Butyraldehyde dehydrogenase	R	BULCOA + NADH = BUTAL + COA + NAD	Lee et al., 2008; Senger and Papoutsakis, 2008a, 2008b; Gheshlaghi et al., 2009; Milne et al., 2023
SPP7	Butanol dehydrogenase	R	BUTAL + NADH = BUT + NAD	Lee et al., 2008; Senger and Papoutsakis, 2008a, 2008b; Gheshlaghi et al., 2009; Milne et al., 2024
PENTOSE PHOSPATE PATHWAY				
PPP1	Phosphopentose isomerase	R	RIBU5P = RIB5P	Nölling et al., 2001; Amador-Noguez et al., 2010; Crown et al., 2011
PPP2	Phosphopentose epimerase	R	RIBU5P = X5P	Nölling et al., 2001; Amador-Noguez et al., 2010; Crown et al., 2011
PPP3	Transketolase	R	RIB5P + X5P = GA3P + SED7P	Nölling et al., 2001; Amador-Noguez et al., 2010; Crown et al., 2011
PPP4	Transaldolase	R	GA3P + SED7P = E4P + F6P	Nölling et al., 2001; Amador-Noguez et al., 2010; Crown et al., 2011
PPP5	Transketolase	R	E4P + X5P = F6P + GA3P	Nölling et al., 2001; Amador-Noguez et al., 2010; Crown et al., 2011
ATP DISSIPATION				
AD1	ATP maintenance requirement	I	ATP = ADP	Lee et al., 2008; Milne et al., 2011
BIOMASS PRODUCTION				
BP1	Biomass formation	I	340 ACCOA + 7000 ATP + 81 G13DP + 700 NADH + 3000 NADPH + 212 PEP + 568 PYR + 126 RIB5P = 7000 ADP + 2239 BIOMASS + 1654 CO2 + 340 COA + 700 NAD + 3000 NADP	This Study.
EXTERNAL METABOLITES				
EM1	Exchange reaction	I	H2 = (EX)H2	Lee et al., 2008; Milne et al., 2011
EM2	Exchange reaction	I	BIOMASS = (EX)BIOMASS	This Study.

EM3	Exchange reaction	I	CO2 = (EX)CO2	Lee et al., 2008; Milne et al., 2011
EM4	Exchange reaction	R	AC = (EX)AC	Lee et al., 2008; Milne et al., 2011
EM5	Exchange reaction	R	BUTY = (EX)BUTY	Lee et al., 2008; Milne et al., 2011
EM6	Exchange reaction	I	ACT = (EX)ACT	Lee et al., 2008; Milne et al., 2011
EM7	Exchange reaction	I	ET = (EX)ET	Lee et al., 2008; Milne et al., 2011
EM8	Exchange reaction	I	BUT = (EX)BUT	Lee et al., 2008; Milne et al., 2011
EM9	Exchange reaction	I	H2O = (EX)H2O	Lee et al., 2008; Milne et al., 2011

References

Amador-Noguez, D., Feng, X.-J., Fan, J., Roquet, N., Rabitz, H., Rabinowitz, J.D., 2010. Systems-level metabolic flux profiling elucidates a complete, bifurcated tricarboxylic acid cycle in Clostridium acetobutylicum. Journal of bacteriology 192, 4452–61.

Crown, S.B., Indurthi, D.C., Ahn, W.S., Choi, J., Papoutsakis, E.T., Antoniewicz, M.R., 2011. Resolving the TCA cycle and pentose-phosphate pathway of Clostridium acetobutylicum ATCC 824: Isotopomer analysis, in vitro activities and expression analysis. Biotechnology journal 6, 300–5.

Gheshlaghi, R., Scharer, J.M., Moo-Young, M., Chou, C.P., 2009. Metabolic pathways of clostridia for producing butanol. Biotechnology advances 27, 764–81.

Kanehisa, M., Goto, S., Hattori, M., Aoki-Kinoshita, K.F., Itoh, M., Kawashima, S., Katayama, T., Araki, M., Hirakawa, M., 2006. From genomics to chemical genomics: new developments in KEGG. Nucleic acids research 34, D354–7.

Lee, J., Yun, H., Feist, A.M., Palsson, B.Ø., Lee, S.Y., 2008. Genome-scale reconstruction and in silico analysis of the Clostridium acetobutylicum ATCC 824 metabolic network. Applied microbiology and biotechnology 80, 849–62.

Milne, C.B., Eddy, J. a, Raju, R., Ardekani, S., Kim, P.-J., Senger, R.S., Jin, Y.-S., Blaschek, H.P., Price, N.D., 2011. Metabolic network reconstruction and genome-scale model of butanol-producing strain Clostridium beijerinckii NCIMB 8052. BMC systems biology 5, 130.

Nölling, J., Breton, G., Omelchenko, M. V, Kira, S., Zeng, Q., Gibson, R., Lee, H.M., Dubois, J., Qiu, D., Hitti, J., Sequencing, G.T.C., Wolf, Y.I., Tatusov, R.L., Sabathe, F., Soucaille, P., Daly, M.J., Bennett, G.N., Koonin, E. V, Smith, D.R., 2001. Genome Sequence and Comparative Analysis of the Solvent-Producing Bacterium Clostridium acetobutylicum Genome Sequence and Comparative Analysis of the Solvent-Producing Bacterium Clostridium acetobutylicum.

Senger, R.S., Papoutsakis, E.T., 2008a. Genome-scale model for Clostridium acetobutylicum: Part I. Metabolic network resolution and analysis. Biotechnology and bioengineering 101, 1036–52.

Senger, R.S., Papoutsakis, E.T., 2008b. Genome-scale model for Clostridium acetobutylicum: Part II. Development of specific proton flux states and numerically determined sub-systems. Biotechnology and bioengineering 101, 1053–71.

Table S3

S.N.	Pathlength	Net reaction
EMs involved in acidogenesis (Group 1)		
EM1	27	5729 (EX)GLC = 4478 (EX)BIOMASS + 4318 (EX)BUTY + 12624 (EX)CO2 + 10876 (EX)H2O
EM2	29	11191 (EX)GLC = 178 (EX)AC + 8956 (EX)BIOMASS + 8280 (EX)BUTY + 24714 (EX)CO2 + 21218 (EX)H2O
EM3	21	(EX)GLC = (EX)BUTY + 2 (EX)CO2 + (EX)H2 + 2 (EX)H2O
EM4	23	3 (EX)GLC = 2 (EX)AC + 2 (EX)BUTY + 6 (EX)CO2 + 6 (EX)H2 + 6 (EX)H2O
EM5	30	26453 (EX)GLC = 9592 (EX)AC + 22390 (EX)BIOMASS + 14602 (EX)BUTY + 58736 (EX)CO2 + 12196 (EX)H2 + 49996 (EX)H2O
EMs involved in solventogenesis (Group 2)		
EM6	15	(EX)GLC = 2 (EX)CO2 + 2 (EX)ET + 2 (EX)H2O
EM7	21	4 (EX)AC + (EX)GLC = 2 (EX)ACT + 4 (EX)CO2 + 2 (EX)ET + 2 (EX)H2O
EM8	22	2 (EX)AC + 2 (EX)BUTY + (EX)GLC = 2 (EX)ACT + 2 (EX)BUT + 4 (EX)CO2 + 2 (EX)H2O
EM9	22	2 (EX)GLC = (EX)ACT + 5 (EX)CO2 + 2 (EX)ET + 4 (EX)H2 + 4 (EX)H2O
EM10	21	(EX)BUTY + (EX)GLC = (EX)ACT + (EX)BUT + 3 (EX)CO2 + 2 (EX)H2 + 2 (EX)H2O
EM11	22	5 (EX)AC + (EX)GLC = 3 (EX)ACT + 5 (EX)CO2 + (EX)ET + 2 (EX)H2 + 2 (EX)H2O
EM12	21	(EX)AC + (EX)GLC = (EX)ACT + 3 (EX)CO2 + (EX)ET + 2 (EX)H2 + 2 (EX)H2O
EM13	24	4 (EX)AC + (EX)BUTY + (EX)GLC = 3 (EX)ACT + (EX)BUT + 5 (EX)CO2 + 2 (EX)H2 + 2 (EX)H2O
EM14	23	4 (EX)AC + (EX)GLC = 2 (EX)ACT + 4 (EX)CO2 + 2 (EX)ET + 2 (EX)H2O
EM15	22	2 (EX)GLC = (EX)ACT + 5 (EX)CO2 + 2 (EX)ET + 4 (EX)H2 + 4 (EX)H2O
EM16	24	5 (EX)AC + (EX)GLC = 3 (EX)ACT + 5 (EX)CO2 + (EX)ET + 2 (EX)H2 + 2 (EX)H2O
EM17	25	4 (EX)AC + (EX)BUTY + (EX)GLC = 3 (EX)ACT + (EX)BUT + 5 (EX)CO2 + 2 (EX)H2 + 2 (EX)H2O
EM18	24	5 (EX)GLC = (EX)ACT + 4 (EX)BUT + 11 (EX)CO2 + 10 (EX)H2O
EM19	23	(EX)BUTY + 3 (EX)GLC = (EX)ACT + 3 (EX)BUT + 7 (EX)CO2 + 6 (EX)H2O
EM20	24	22 (EX)AC + 5 (EX)GLC = 12 (EX)ACT + 4 (EX)BUT + 22 (EX)CO2 + 10 (EX)H2O
EM21	23	2 (EX)AC + 5 (EX)GLC = 2 (EX)ACT + 4 (EX)BUT + 12 (EX)CO2 + 10 (EX)H2O
EM22	25	5 (EX)GLC = 3 (EX)ACT + 2 (EX)BUT + 13 (EX)CO2 + 10 (EX)H2 + 10 (EX)H2O
EM23	25	26 (EX)AC + 5 (EX)GLC = 16 (EX)ACT + 2 (EX)BUT + 26 (EX)CO2 + 10 (EX)H2 + 10 (EX)H2O
EM24	24	6 (EX)AC + 5 (EX)GLC = 6 (EX)ACT + 2 (EX)BUT + 16 (EX)CO2 + 10 (EX)H2 + 10 (EX)H2O
EM25	24	5 (EX)GLC = (EX)ACT + 4 (EX)BUT + 11 (EX)CO2 + 10 (EX)H2O
EM26	26	22 (EX)AC + 5 (EX)GLC = 12 (EX)ACT + 4 (EX)BUT + 22 (EX)CO2 + 10 (EX)H2O
EM27	25	5 (EX)GLC = 3 (EX)ACT + 2 (EX)BUT + 13 (EX)CO2 + 10 (EX)H2 + 10 (EX)H2O
EM28	27	26 (EX)AC + 5 (EX)GLC = 16 (EX)ACT + 2 (EX)BUT + 26 (EX)CO2 + 10 (EX)H2 + 10

		(EX)H2O

EMs comprising both phases (acidogenesis and solventogenesis) in network (Group 3)

Glucose as a substrate

EM29	25	13261 (EX)GLC = 4318 (EX)AC + 8956 (EX)BIOMASS + 28854 (EX)CO2 + 16560 (EX)ET + 25358 (EX)H2O
EM30	28	28681 (EX)GLC = 4318 (EX)ACT + 17912 (EX)BIOMASS + 66344 (EX)CO2 + 37438 (EX)ET + 55034 (EX)H2O
EM31	19	(EX)GLC = (EX)AC + 2 (EX)CO2 + (EX)ET + 2 (EX)H2 + 2 (EX)H2O
EM32	26	8666 (EX)GLC = 5798 (EX)AC + 6717 (EX)BIOMASS + 19081 (EX)CO2 + 7301 (EX)ET + 5119 (EX)H2 + 16459 (EX)H2O
EM33	29	16376 (EX)GLC = 5798 (EX)ACT + 11195 (EX)BIOMASS + 41465 (EX)CO2 + 14101 (EX)ET + 12397 (EX)H2 + 31297 (EX)H2O
EM34	28	28681 (EX)GLC = 4318 (EX)ACT + 17912 (EX)BIOMASS + 66344 (EX)CO2 + 37438 (EX)ET + 55034 (EX)H2O
EM35	29	16376 (EX)GLC = 5798 (EX)ACT + 11195 (EX)BIOMASS + 41465 (EX)CO2 + 14101 (EX)ET + 12397 (EX)H2 + 31297 (EX)H2O
EM36	22	5 (EX)GLC = 2 (EX)AC + 4 (EX)BUT + 10 (EX)CO2 + 10 (EX)H2O
EM37	29	11881 (EX)GLC = 7078 (EX)AC + 8956 (EX)BIOMASS + 5520 (EX)BUT + 26094 (EX)CO2 + 22598 (EX)H2O
EM38	31	74193 (EX)GLC = 21234 (EX)ACT + 49258 (EX)BIOMASS + 37438 (EX)BUT + 182446 (EX)CO2 + 141984 (EX)H2O
EM39	23	5 (EX)GLC = 6 (EX)AC + 2 (EX)BUT + 10 (EX)CO2 + 10 (EX)H2 + 10 (EX)H2O
EM40	30	43785 (EX)GLC = 35790 (EX)AC + 35824 (EX)BIOMASS + 14602 (EX)BUT + 96898 (EX)CO2 + 22434 (EX)H2 + 82914 (EX)H2O
EM41	32	82335 (EX)GLC = 35790 (EX)ACT + 58214 (EX)BIOMASS + 28202 (EX)BUT + 215618 (EX)CO2 + 58824 (EX)H2 + 157104 (EX)H2O
EM42	22	2 (EX)GLC = (EX)BUT + (EX)BUTY + 4 (EX)CO2 + 4 (EX)H2O
EM43	31	50493 (EX)GLC = 356 (EX)ACT + 40302 (EX)BIOMASS + 37438 (EX)BUTY + 111836 (EX)CO2 + 95748 (EX)H2O
EM44	29	50493 (EX)GLC = 356 (EX)ACT + 40302 (EX)BIOMASS + 37438 (EX)BUTY + 111836 (EX)CO2 + 95748 (EX)H2O
EM45	31	74193 (EX)GLC = 21234 (EX)ACT + 49258 (EX)BIOMASS + 37438 (EX)BUT + 182446 (EX)CO2 + 141984 (EX)H2O
EM46	25	3 (EX)GLC = (EX)ACT + 2 (EX)BUTY + 7 (EX)CO2 + 6 (EX)H2 + 6 (EX)H2O
EM47	23	3 (EX)GLC = (EX)ACT + 2 (EX)BUTY + 7 (EX)CO2 + 6 (EX)H2 + 6 (EX)H2O
EM48	32	50493 (EX)GLC = 9592 (EX)ACT + 40302 (EX)BIOMASS + 28202 (EX)BUTY + 121072 (EX)CO2 + 27708 (EX)H2 + 95748 (EX)H2O
EM49	30	50493 (EX)GLC = 9592 (EX)ACT + 40302 (EX)BIOMASS + 28202 (EX)BUTY + 121072 (EX)CO2 + 27708 (EX)H2 + 95748 (EX)H2O
EM50	32	82335 (EX)GLC = 35790 (EX)ACT + 58214 (EX)BIOMASS + 28202 (EX)BUT +

		215618 (EX)CO2 + 58824 (EX)H2 + 157104 (EX)H2O
Glucose and acetic acid as substrates		
EM51	27	2159 (EX)AC + 7710 (EX)GLC = 2159 (EX)ACT + 4478 (EX)BIOMASS + 18745 (EX)CO2 + 10439 (EX)ET + 14838 (EX)H2O
EM52	28	2899 (EX)AC + 3855 (EX)GLC = 2899 (EX)ACT + 2239 (EX)BIOMASS + 11192 (EX)CO2 + 3400 (EX)ET + 3639 (EX)H2 + 7419 (EX)H2O
EM53	30	10617 (EX)AC + 19275 (EX)GLC = 10617 (EX)ACT + 11195 (EX)BIOMASS + 10439 (EX)BUT + 52082 (EX)CO2 + 37095 (EX)H2O
EM54	31	3579 (EX)AC + 3855 (EX)GLC = 3579 (EX)ACT + 2239 (EX)BIOMASS + 1360 (EX)BUT + 11872 (EX)CO2 + 3639 (EX)H2 + 7419 (EX)H2O
EM55	22	2 (EX)AC + 3 (EX)GLC = 4 (EX)BUTY + 6 (EX)CO2 + 6 (EX)H2O
EM56	24	18 (EX)AC + 3 (EX)GLC = 8 (EX)ACT + 4 (EX)BUTY + 14 (EX)CO2 + 6 (EX)H2O
EM57	24	18 (EX)AC + 3 (EX)GLC = 8 (EX)ACT + 4 (EX)BUTY + 14 (EX)CO2 + 6 (EX)H2O
EM58	30	356 (EX)AC + 28111 (EX)GLC = 356 (EX)ACT + 22390 (EX)BIOMASS + 20878 (EX)BUTY + 62408 (EX)CO2 + 53312 (EX)H2O
EM59	25	18 (EX)AC + 3 (EX)GLC = 10 (EX)ACT + 2 (EX)BUTY + 16 (EX)CO2 + 6 (EX)H2 + 6 (EX)H2O
EM60	24	2 (EX)AC + 3 (EX)GLC = 2 (EX)ACT + 2 (EX)BUTY + 8 (EX)CO2 + 6 (EX)H2 + 6 (EX)H2O
EM61	25	18 (EX)AC + 3 (EX)GLC = 10 (EX)ACT + 2 (EX)BUTY + 16 (EX)CO2 + 6 (EX)H2 + 6 (EX)H2O
EM62	31	1199 (EX)AC + 3005 (EX)GLC = 1199 (EX)ACT + 2239 (EX)BIOMASS + 1700 (EX)BUTY + 7792 (EX)CO2 + 1939 (EX)H2 + 5719 (EX)H2O
Glucose and butyric acid as substrates		
EM63	30	2159 (EX)BUTY + 7710 (EX)GLC = 2159 (EX)ACT + 4478 (EX)BIOMASS + 2159 (EX)BUT + 18745 (EX)CO2 + 8280 (EX)ET + 14838 (EX)H2O
EM64	31	2899 (EX)BUTY + 3855 (EX)GLC = 2899 (EX)ACT + 2239 (EX)BIOMASS + 2899 (EX)BUT + 11192 (EX)CO2 + 501 (EX)ET + 3639 (EX)H2 + 7419 (EX)H2O
EM65	30	3539 (EX)BUTY + 7710 (EX)GLC = 3539 (EX)ACT + 4478 (EX)BIOMASS + 6299 (EX)BUT + 20125 (EX)CO2 + 14838 (EX)H2O
EM66	31	5965 (EX)BUTY + 7710 (EX)GLC = 5965 (EX)ACT + 4478 (EX)BIOMASS + 6299 (EX)BUT + 22551 (EX)CO2 + 7278 (EX)H2 + 14838 (EX)H2O
Glucose, acetic acid, and butyric acid as substrates		
EM67	31	1002 (EX)AC + 7301 (EX)BUTY + 8211 (EX)GLC = 7301 (EX)ACT + 4478 (EX)BIOMASS + 7301 (EX)BUT + 24889 (EX)CO2 + 8280 (EX)H2 + 15840 (EX)H2O

Table S4

Products (in different combinations)	Elementary modes (EMs) involved	Number of EMs
BIOMASS + CO2 + H2 + AC + BUTY	EM5	1
BIOMASS + CO2 + H2 + BUTY	-	0
CO2 + H2 + AC + BUTY	EM4	1
BIOMASS + CO2 + AC + BUTY	EM2	1
BIOMASS + CO2 + BUTY	EM1	1
CO2 + H2 + BUTY	EM3	1
	Total	5

Table S5 (a)

Substrates (as singular or in combinations)	Number of elementary modes (EMs) involved	Number of EMs
GLC + AC + BUTY	EM13, EM18, EM22	3
GLC + AC	EM12, EM16, EM17, EM19, EM21, EM25, EM26, EM28, EM29, EM31, EM33	11
GLC + BUTY	EM15, EM24	2
AC + BUTY	0	0
GLC	EM11, EM14, EM20, EM23, EM27, EM30, EM32	7
AC	0	0
BUTY	0	0
	Total	23

Table S5 (b)

Products (as singular or in combinations)	Number of elementary modes (EMs) involved	Number of EMs
ACT + ET+ BUT +H2	-	0
ACT + BUT + H2	EM15, EM18, EM22, EM27, EM28, EM29, EM32, EM33	8
ACT + ET + H2	EM14, EM16, EM17, EM20, EM21	5
ET + BUT + H2	-	0
ACT + H2	-	0
ET + H2	-	0
BUT + H2	-	0
ACT + ET + BUT	-	0
ACT + BUT	EM13, EM23, EM24, EM25, EM26, EM30, EM31	7
ACT + ET	EM12, EM19	2
ET + BUT	-	0
ACT	-	0
ET	EM11	1
BUT	-	0
H2	-	0
	Total	23

Table S6

Substrates	Products		
	Biomass+Acids+Solvents	Biomass+Solvents	Acids+Solvents
GLC	EM29, EM32, EM37, EM40, EM43, EM44, EM48, EM49	EM30, EM33, EM34,EM35, EM38, EM41, EM45, EM50	EM31, EM36, EM39, EM42, EM46, EM47
GLC + AC	EM58, EM62	EM51, EM52, EM53, EM54	EM55, EM56, EM57, EM59, EM60, EM61
GLC + BUTY		EM63, EM64, EM65, EM66	
GLC + AC + BUTY		EM67	

Table 7S

Metabolic phase	External metabolites	Accumulation rates (mM h^{-1})							
		Unstressed conditions					Stressed conditions		
		Initial pH 6.8	Initial pH 5.99	Initial pH 4.5	Addition of acetic acid	Addition of butyric acid	Starting with 6.8 and holding at 5.0	Constant pH 4.5	Diluted culture
Acidogenesis	Glucose	-10.2	-3.85	-2.561	-0.983	-0.414	-14.09	-17	-3.378
	Biomass	6.981	2.765	1.402	0.597	0.333	8.604	10.2	2.832
	Acetic acid	3.563	1.365	0.94	0	0.155	3.88	4.912	1.185
	Butyric acid	6.16	2.296	1.501	0.795	0.232	5.7	6.843	1.9
	Acetone	-	-	-	-	-	1.28	1.48	-
	Butanol	-	-	-	-	-	2.05	2.37	-
	Ethanol	-	-	-	-	-	0.98	1.48	-
Solventogenesis	Glucose	-3.681	-3.834	-1.103	-0.101	-0.861	-5.548	-2.829	-3.677
	Biomass	-	-	-	0	0.302	-	-	0.529
	Acetic acid	-0.827	-1.005	0	-0.047	0.16	2.22	1.13	-0.437
	Butyric acid	-0.178	-1.896	0	-0.08	-0.602	2.79	1.353	-0.932
	Acetone	2.01	2.3	0.45	0.052	0.6	0.56	0.314	1.92
	Butanol	2.23	3.358	0.548	0.172	0.672	0.92	0.49	2.46
	Ethanol	0.034	1.15	0.2	0.043	0.026	0.36	0.227	0.575